注意：

不包含印刷零件、贴纸、人仔、以及人仔相关零件、道具。

NOTICE:

NO printed parts, stickers, minifigures or related mini tools contained.

HAMMOND B3

1

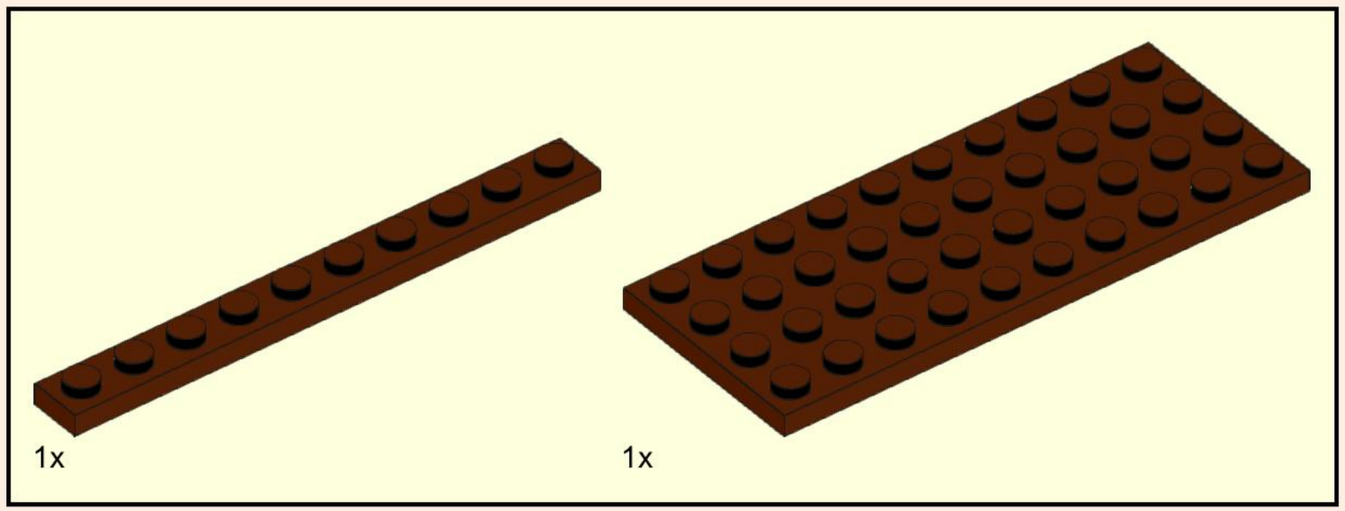

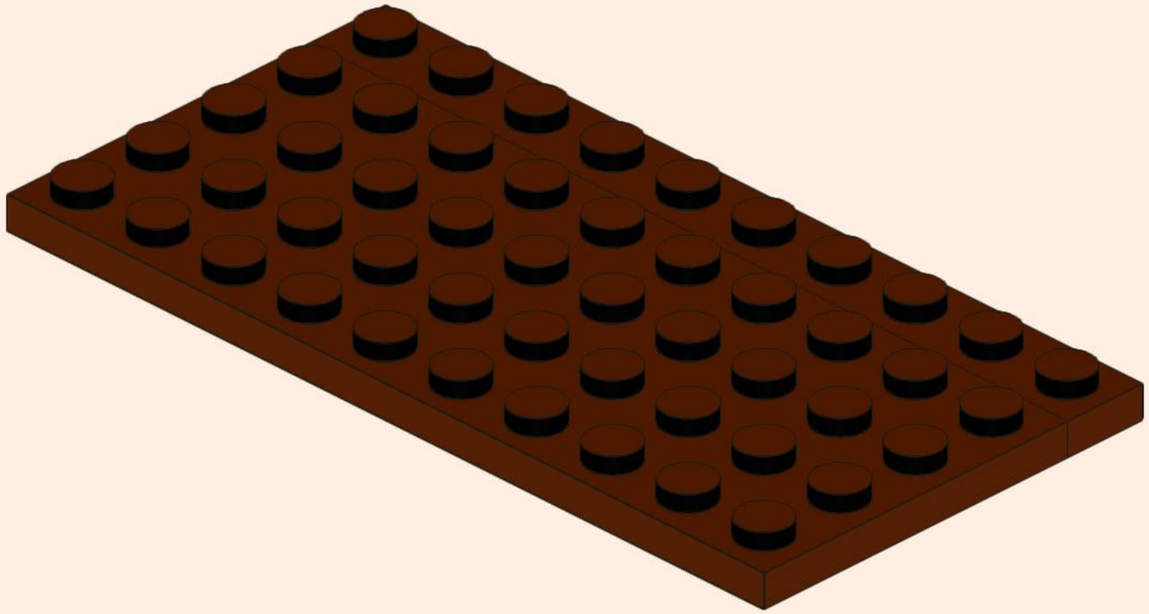

2

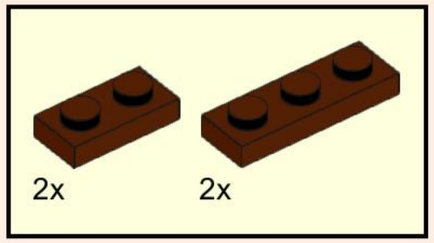

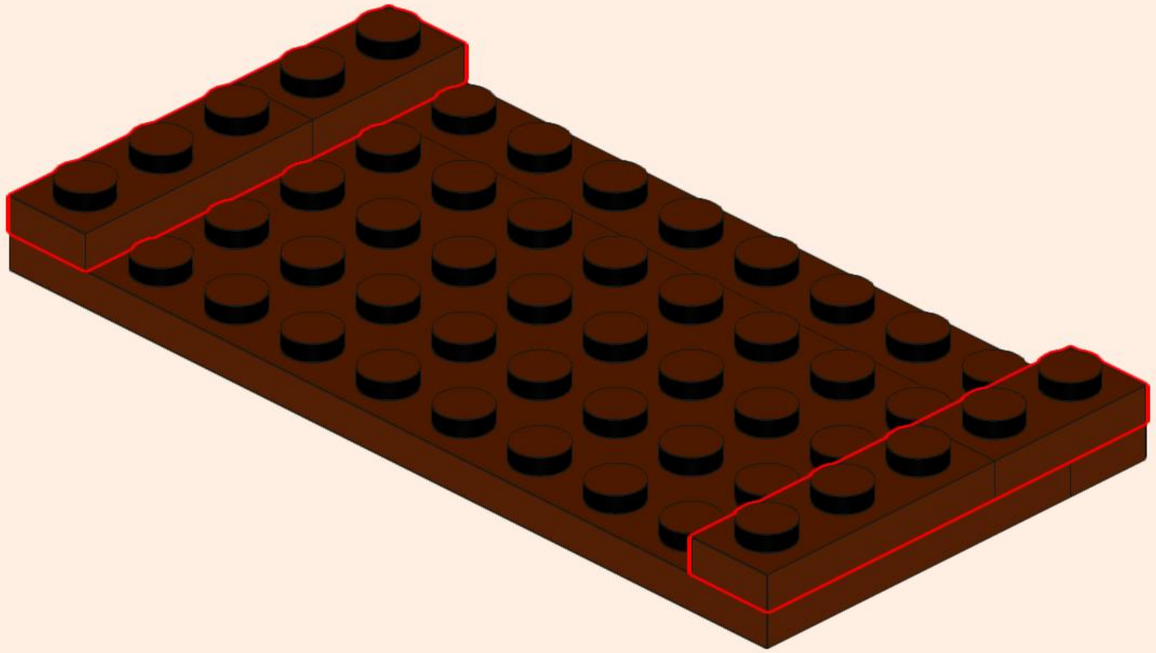

3

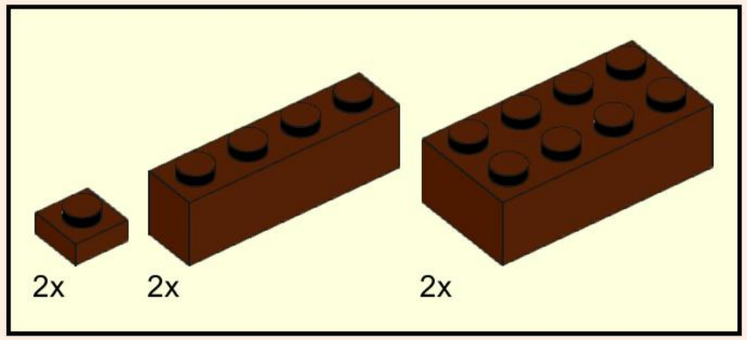

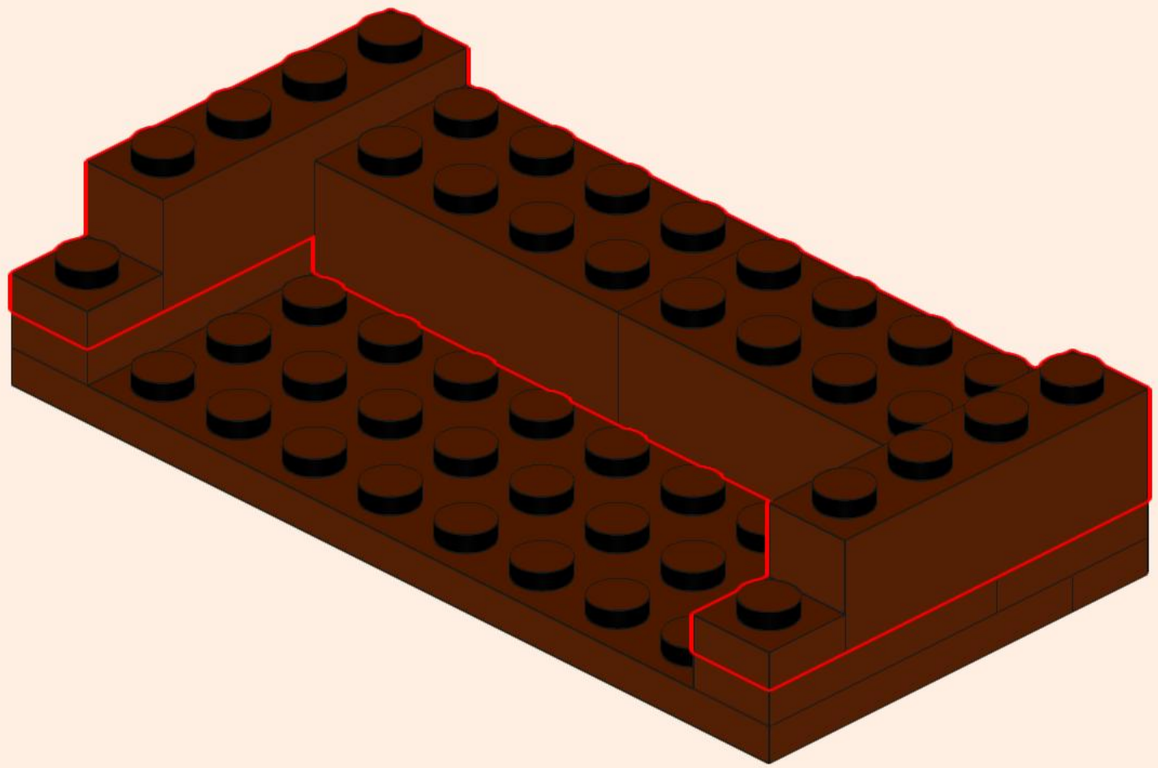

4

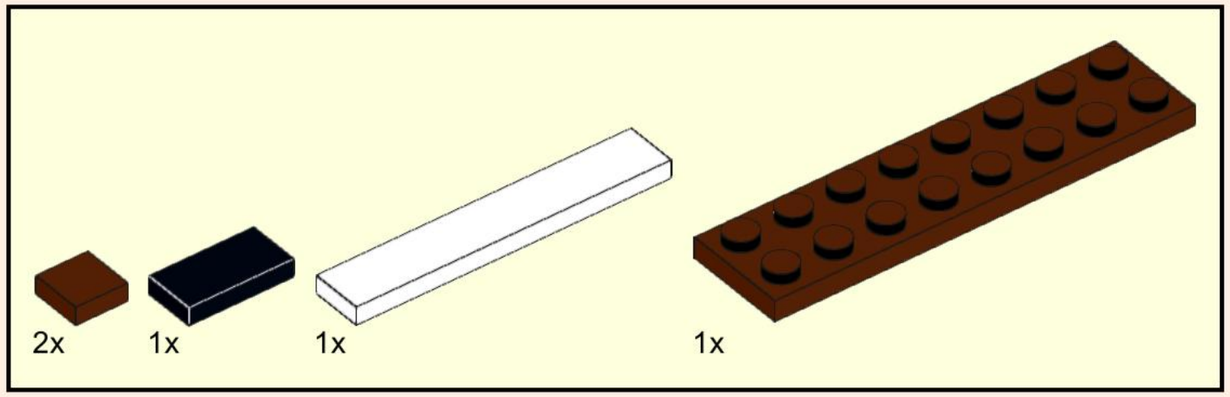

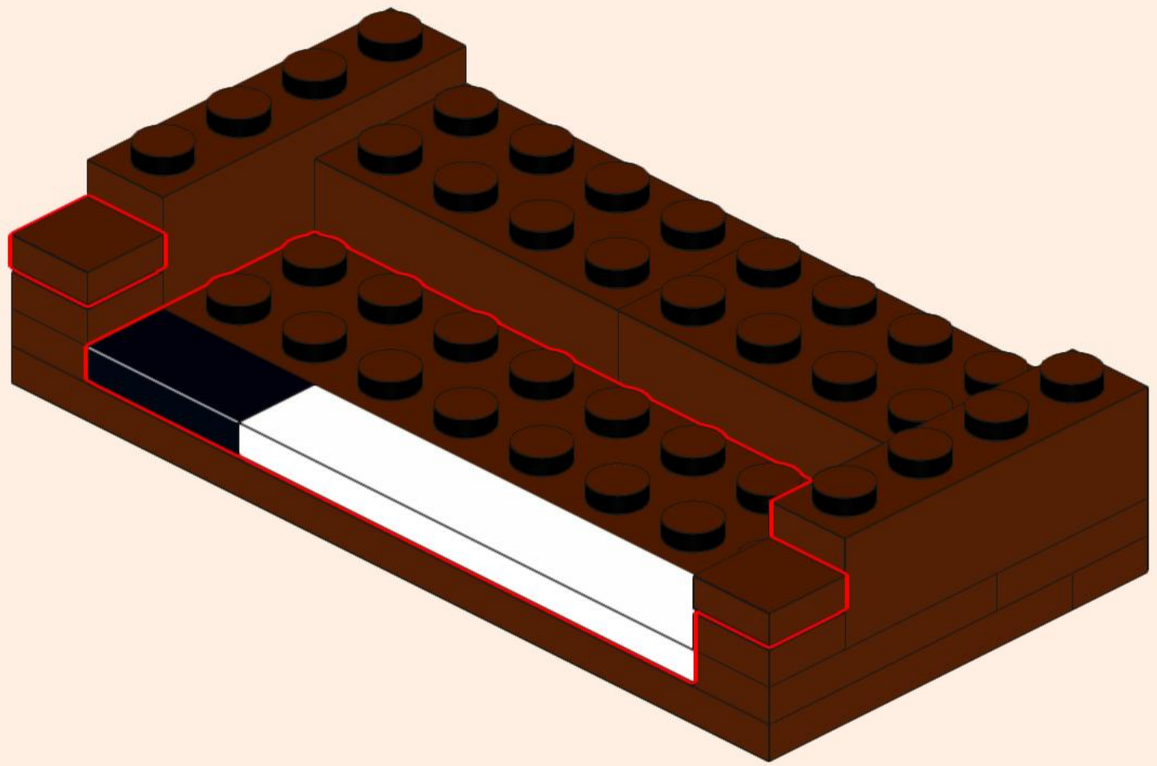

5

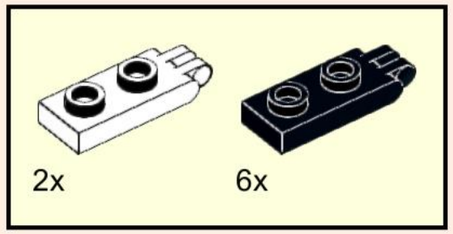

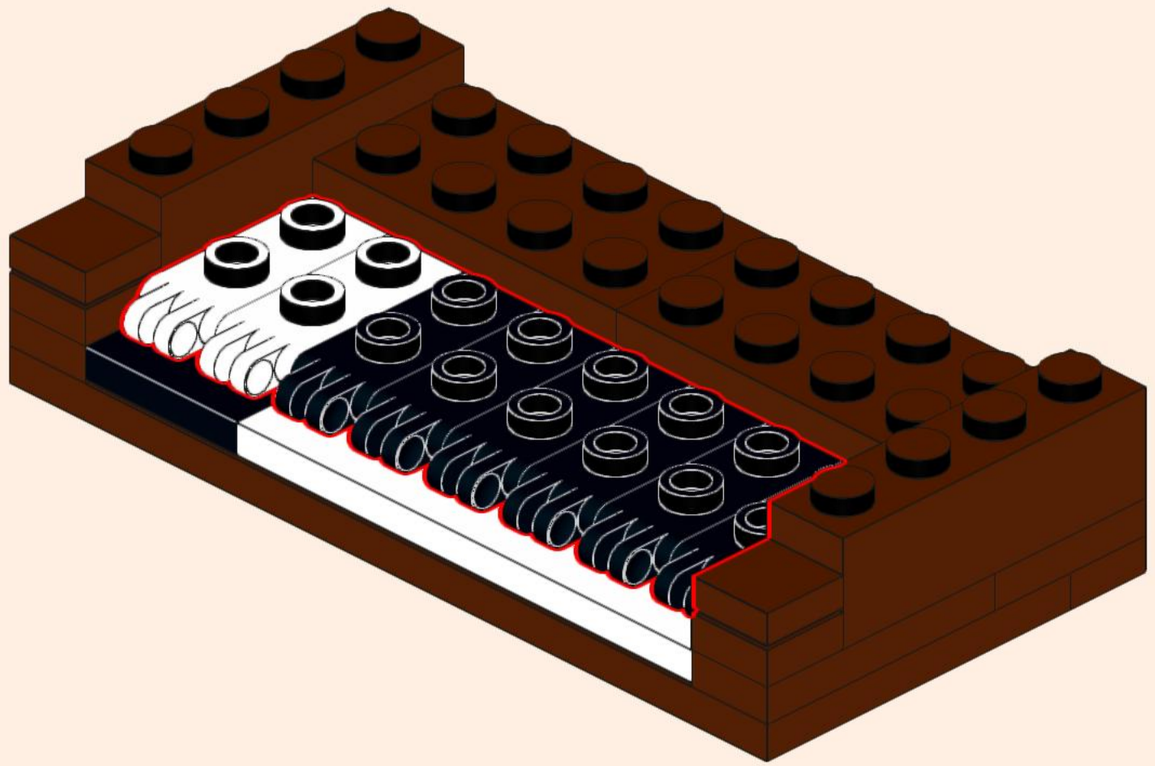

6

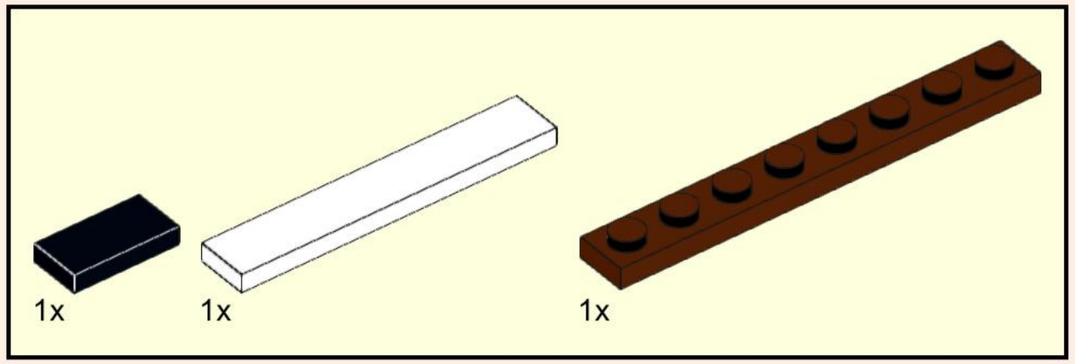

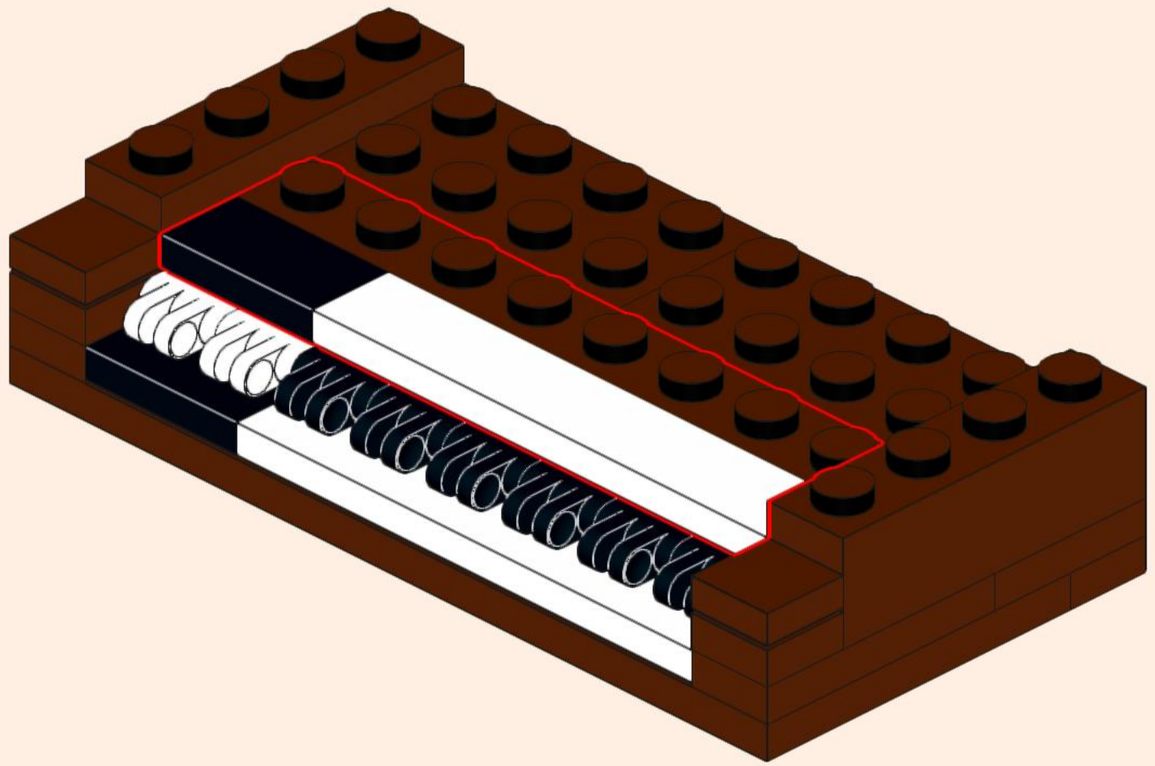

7

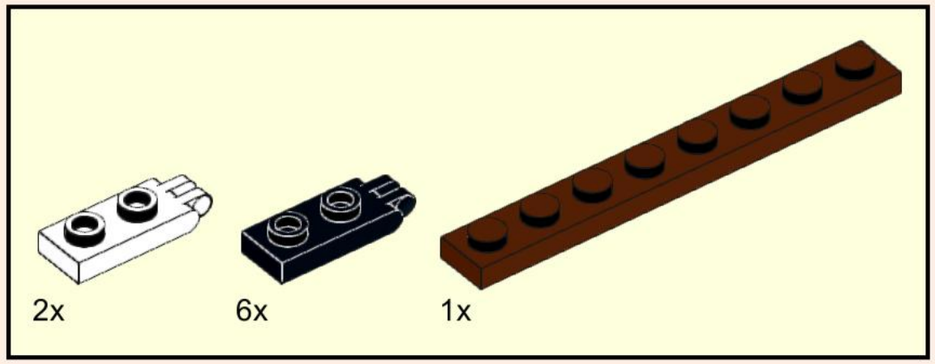

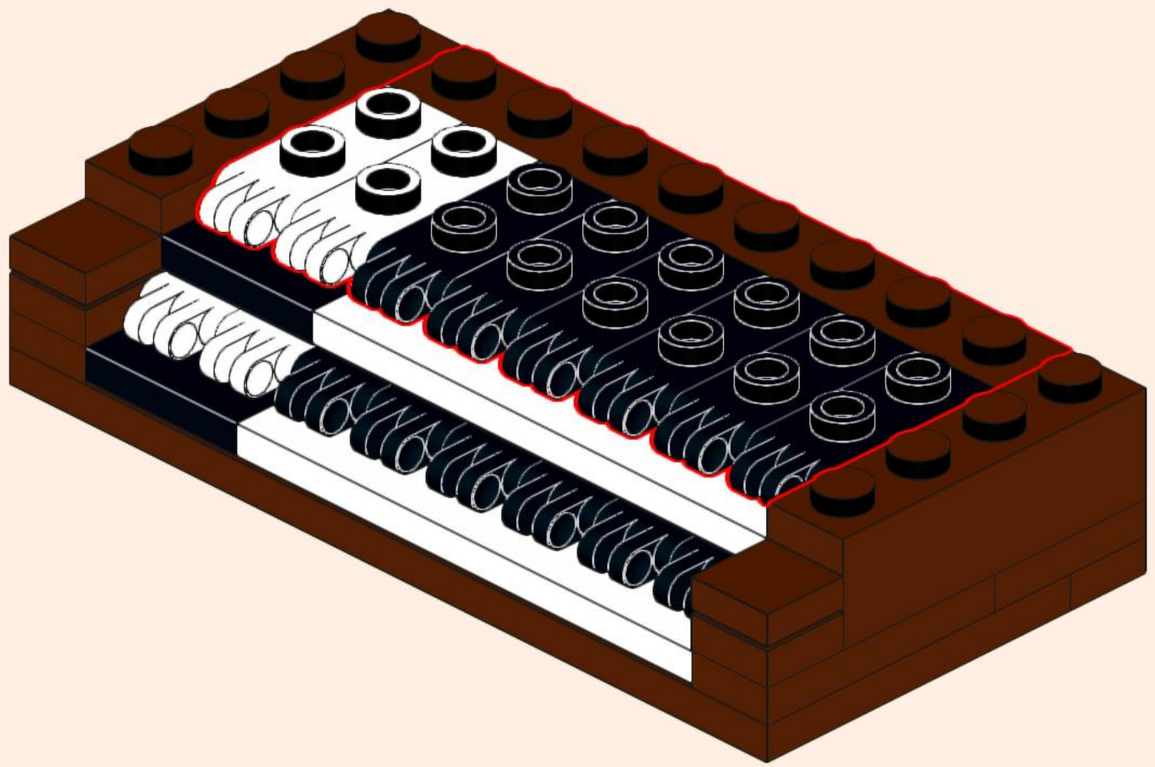

8

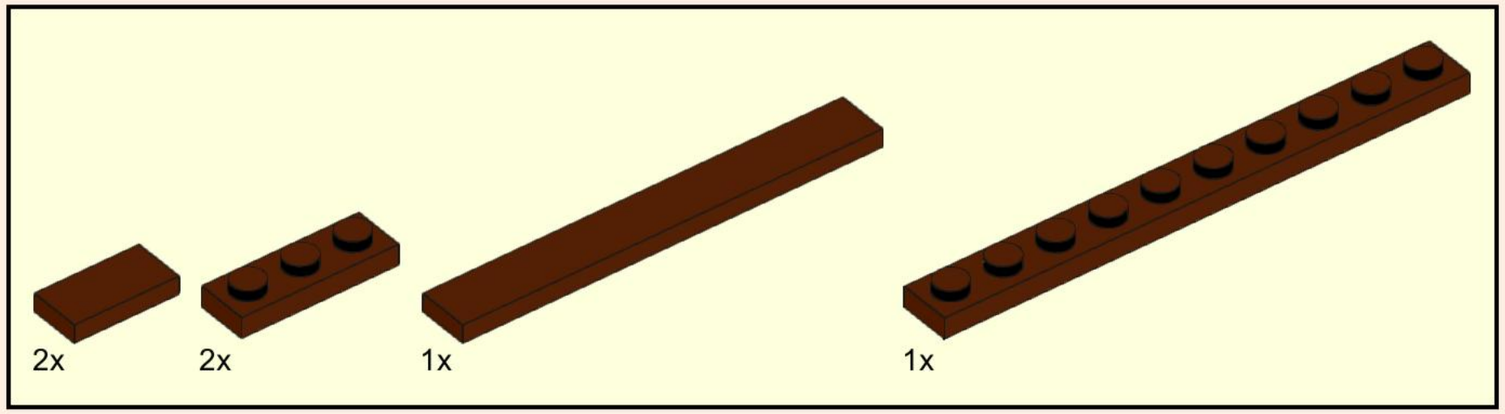

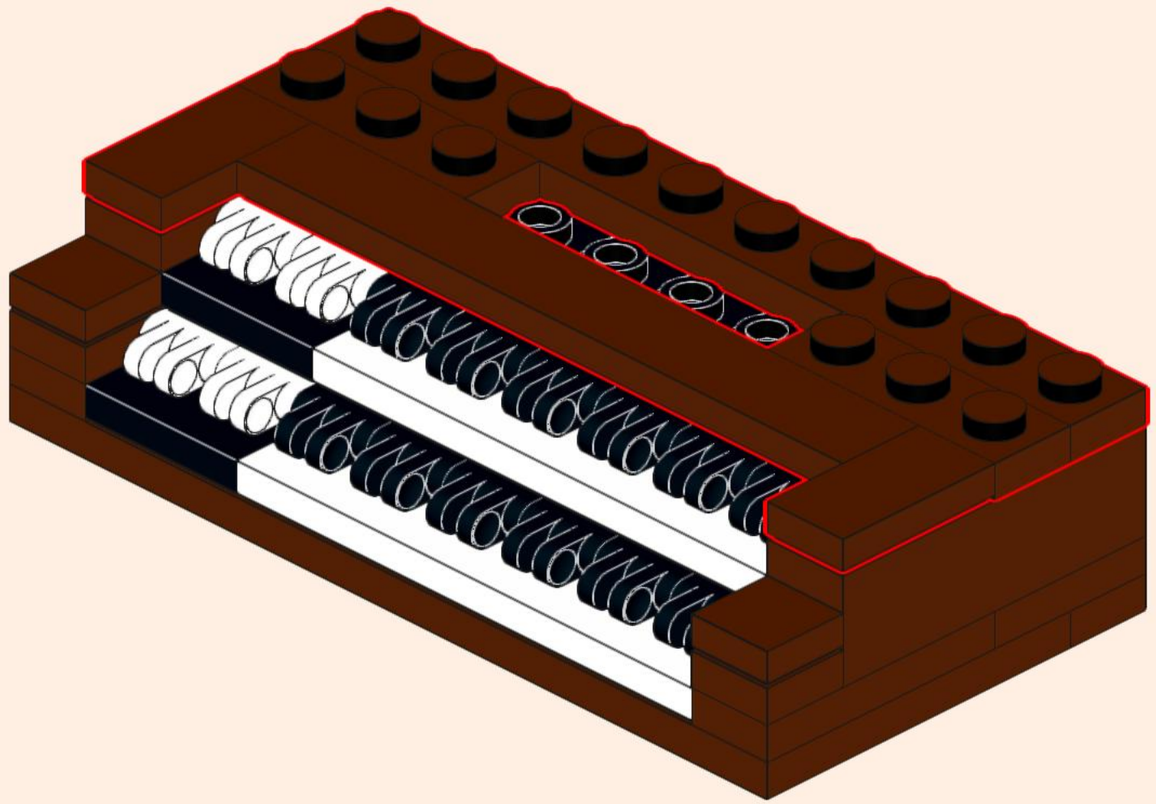

9

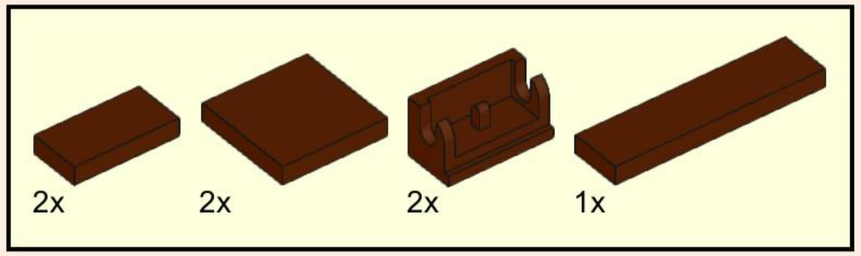

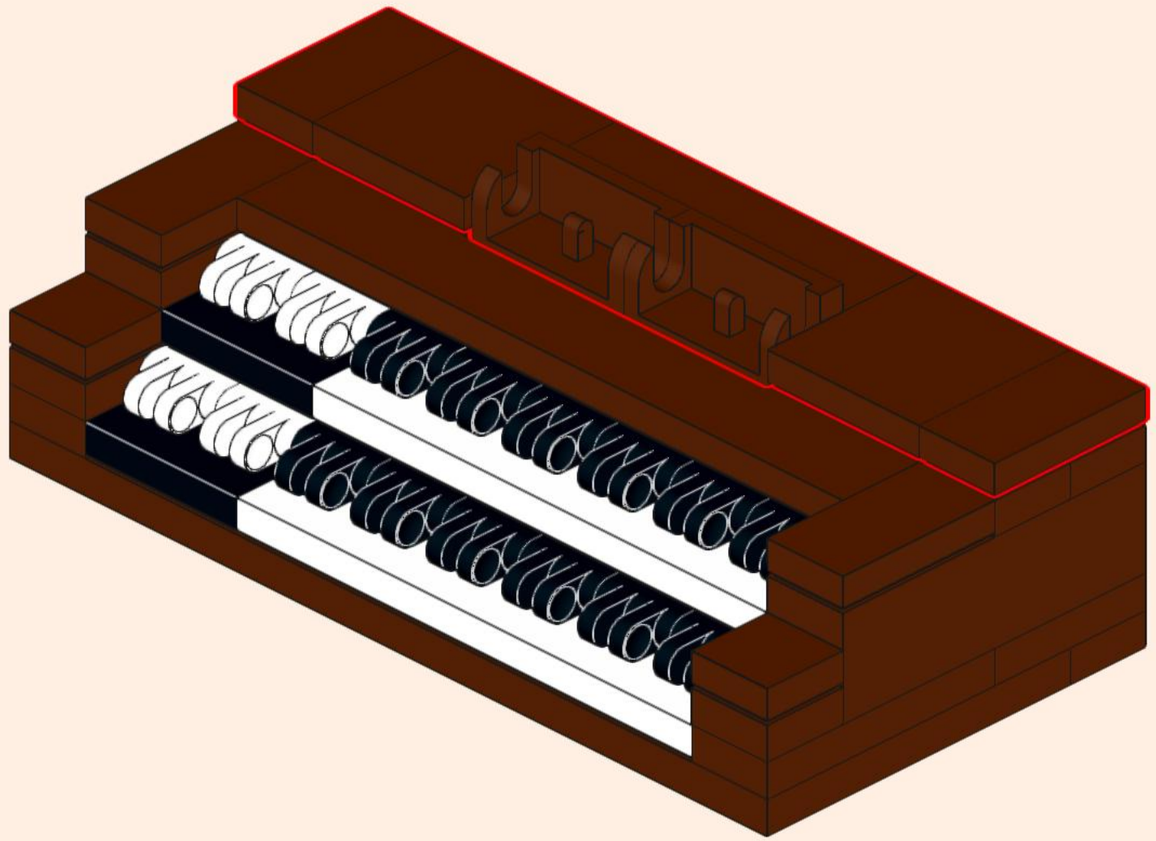

10

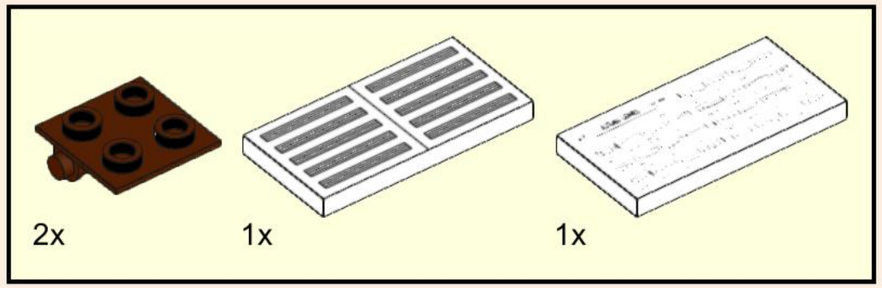

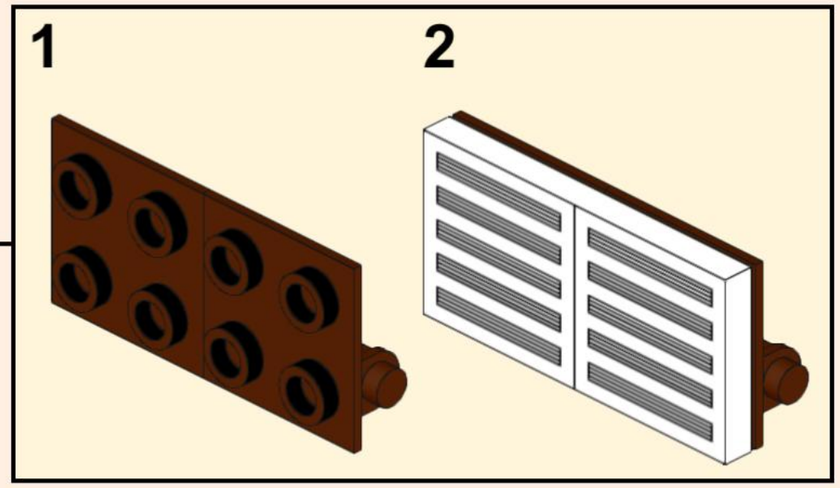

Print #1:
Music Sheets

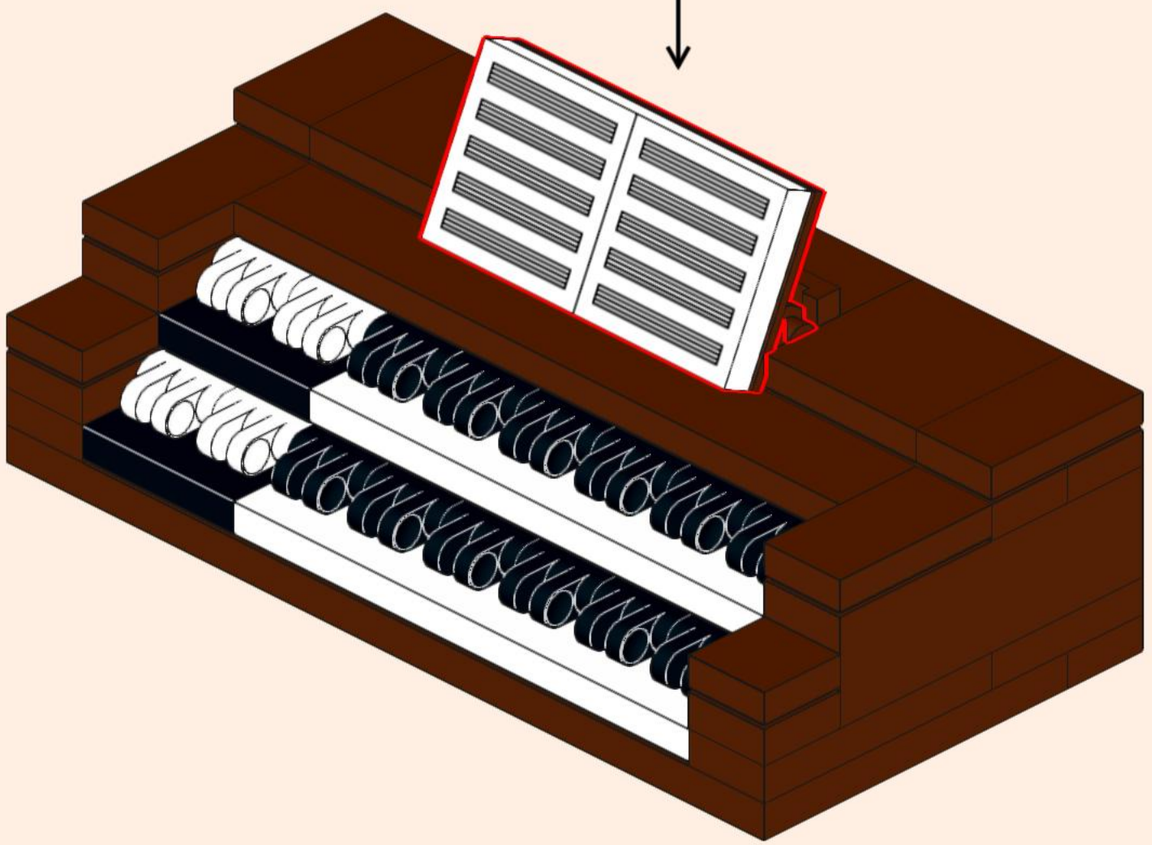

11

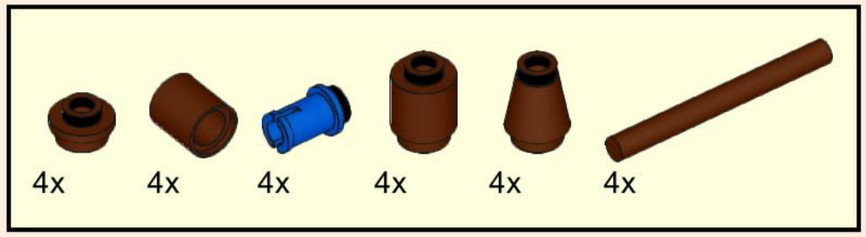

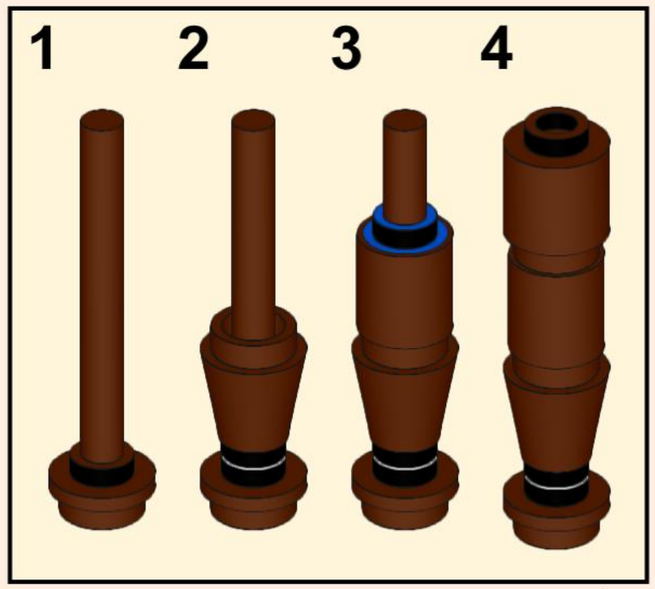

Note:
Assemble the legs on a plate so that the underside can be mounted onto a plate later on as well.
This will also ensure the right spacing between the parts.

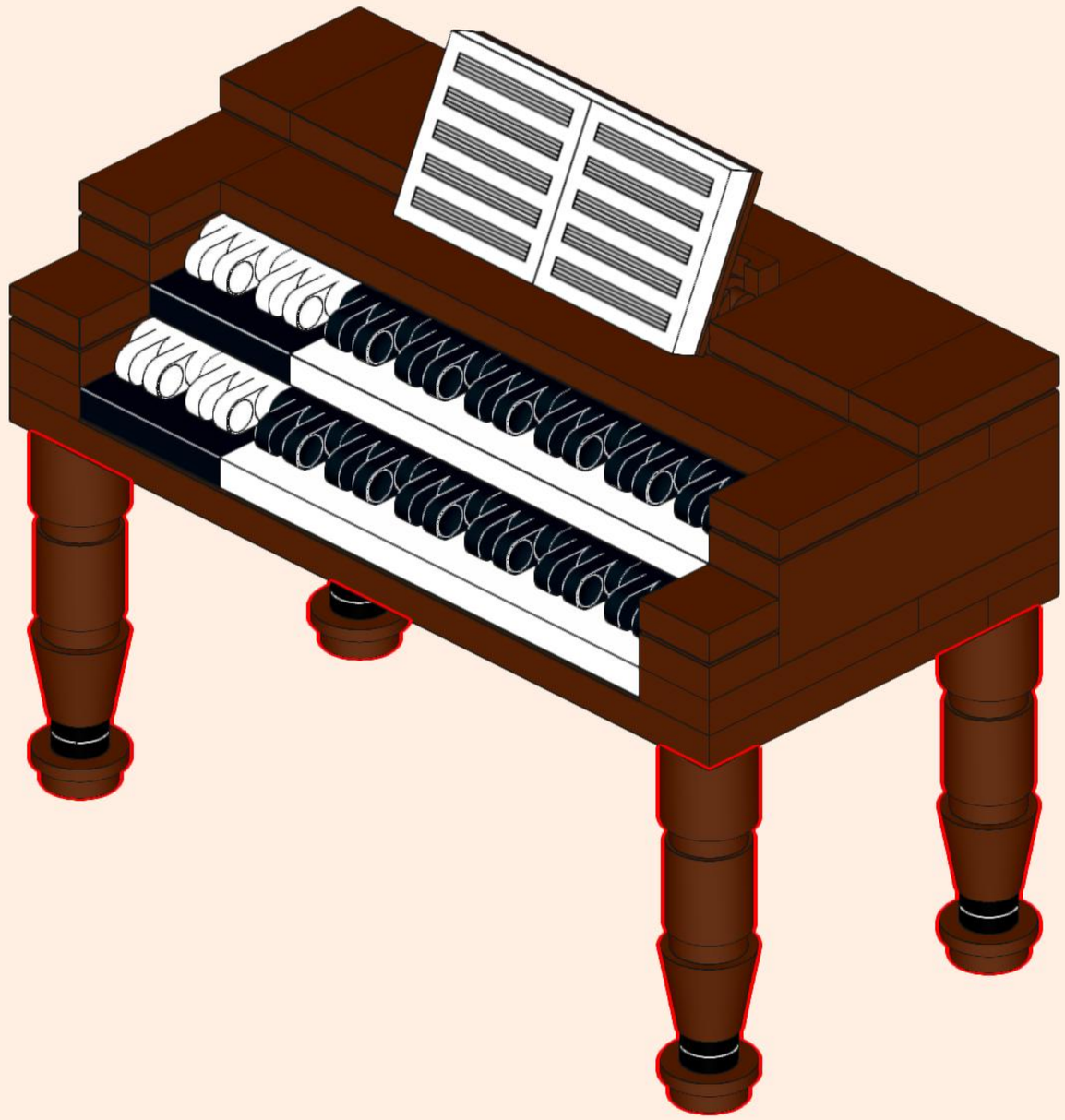

12

13

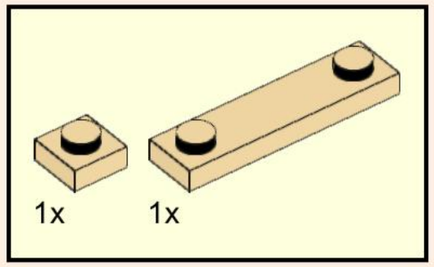

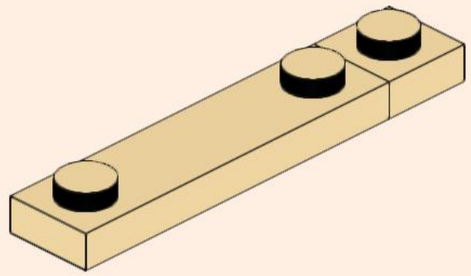

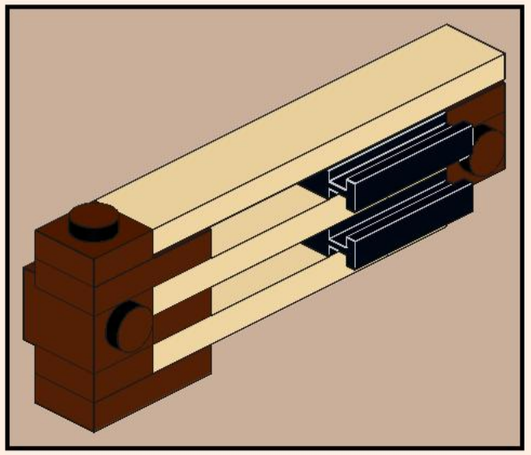

14

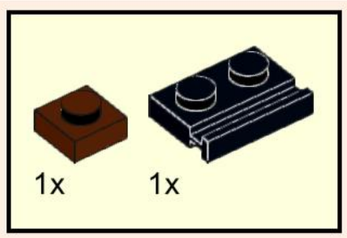

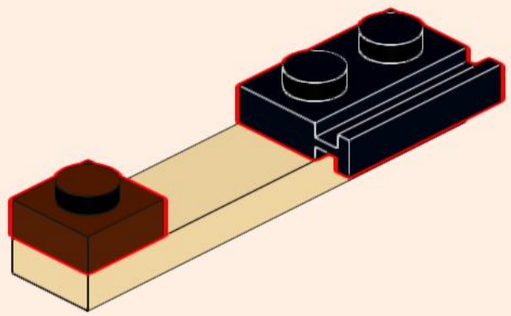

15

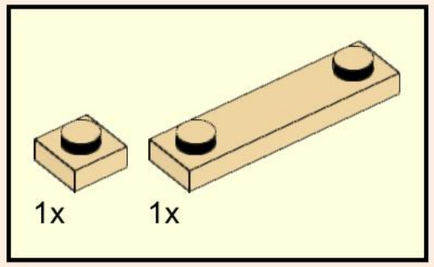

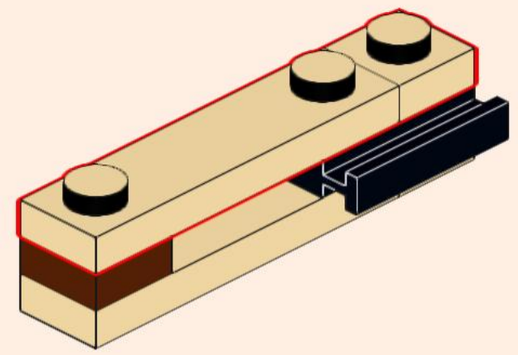

16

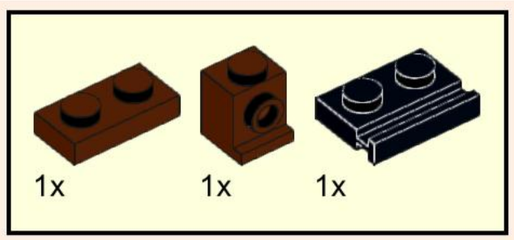

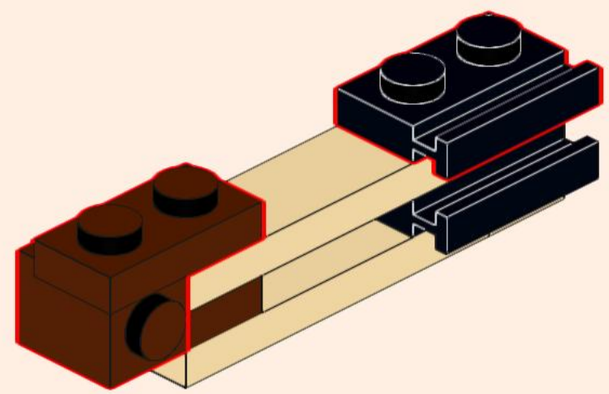

17

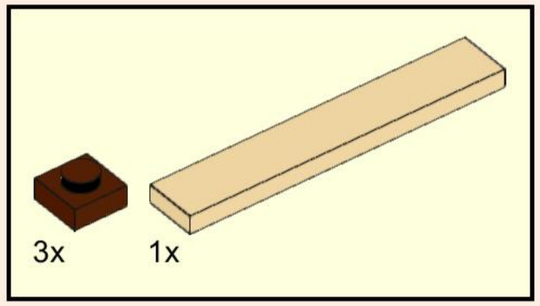

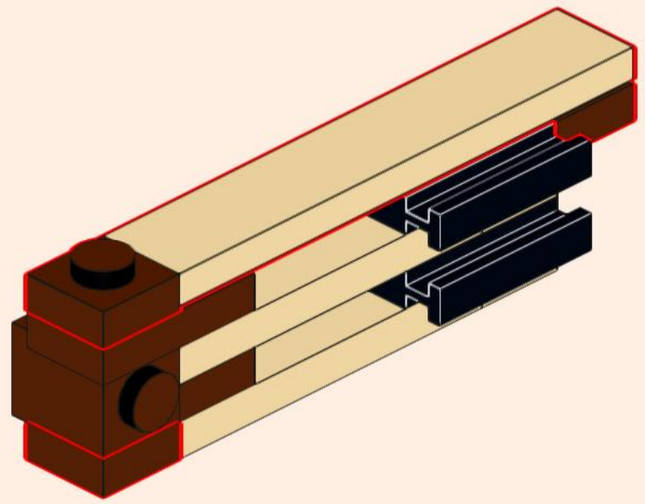

18

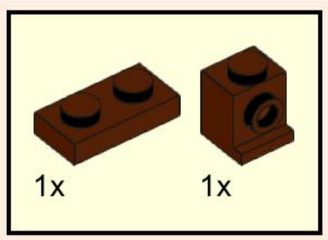

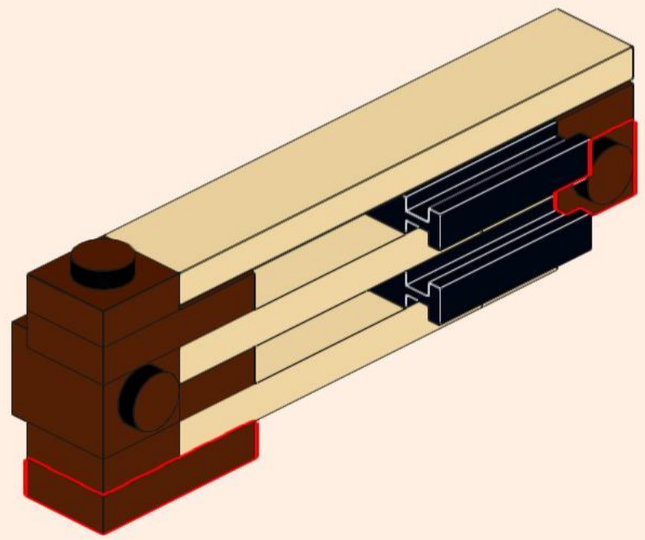

19

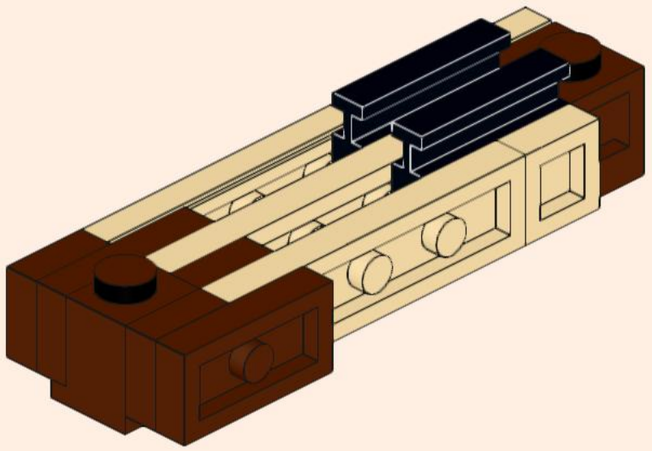

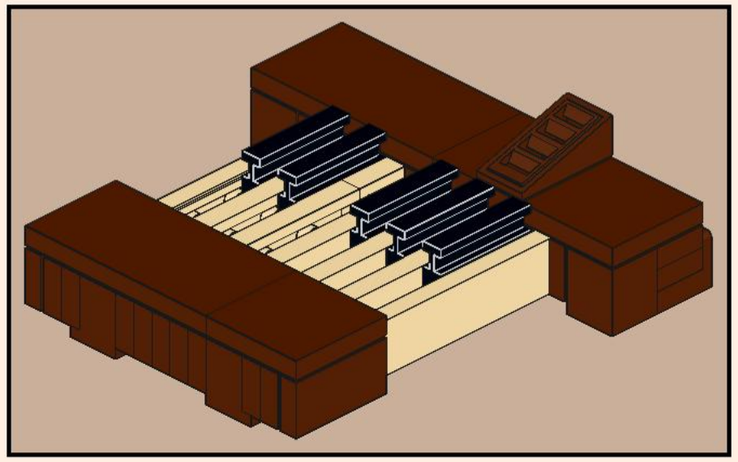

20

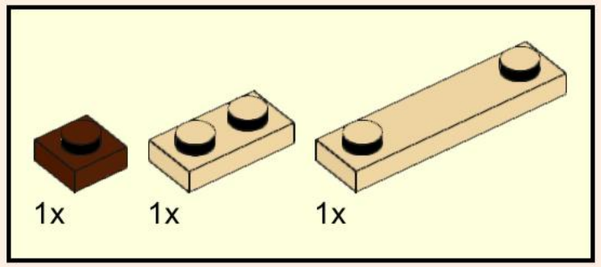

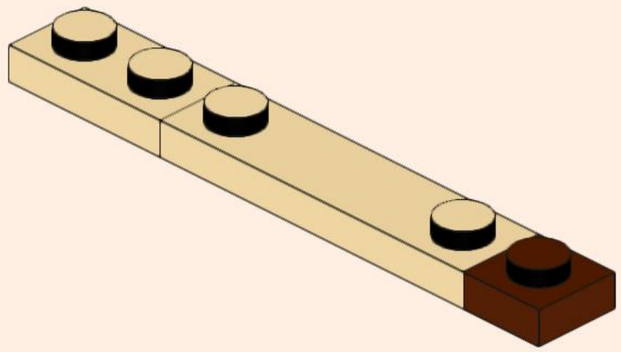

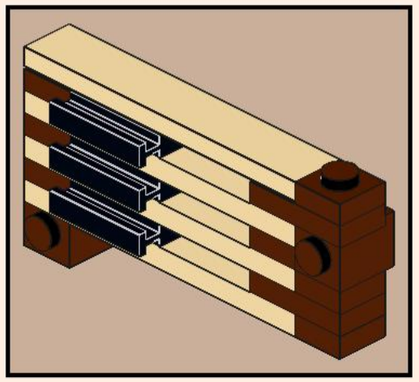

21

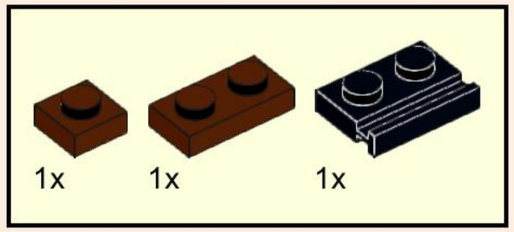

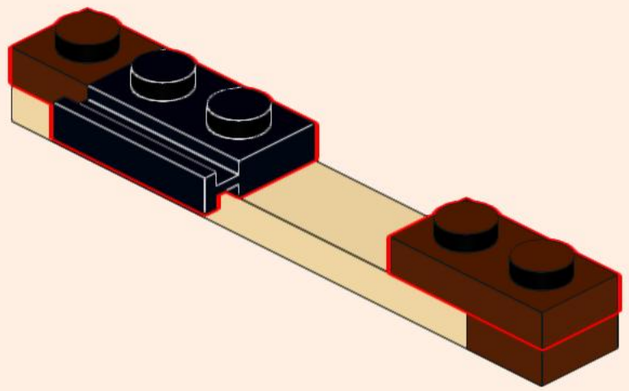

22

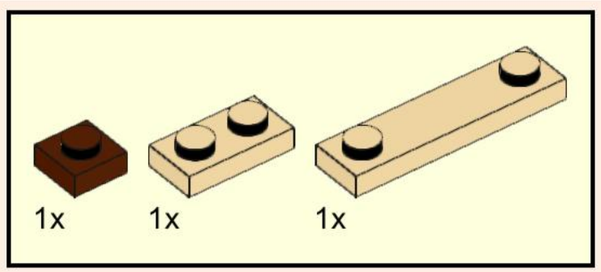

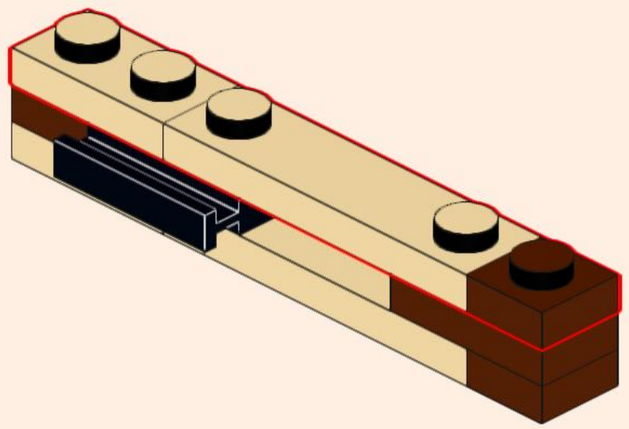

23

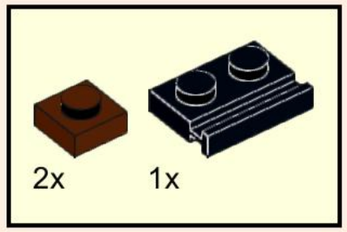

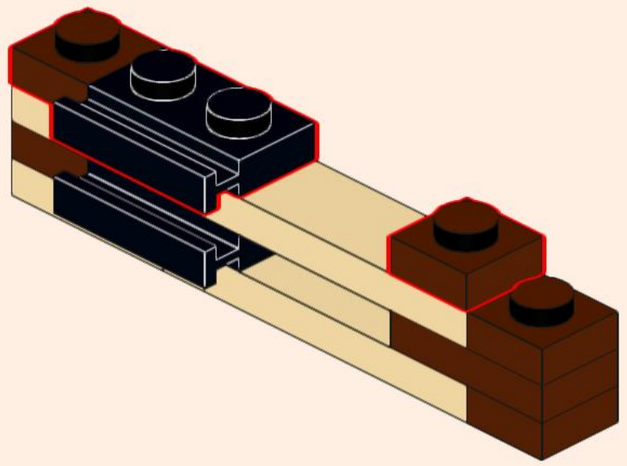

24

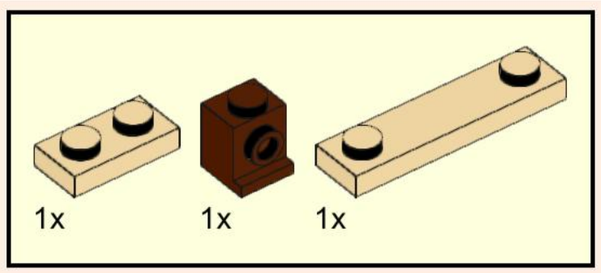

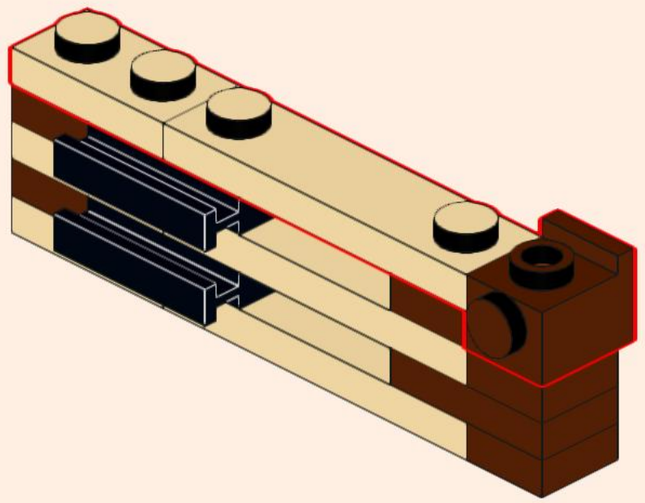

25

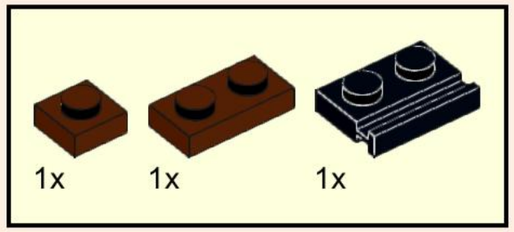

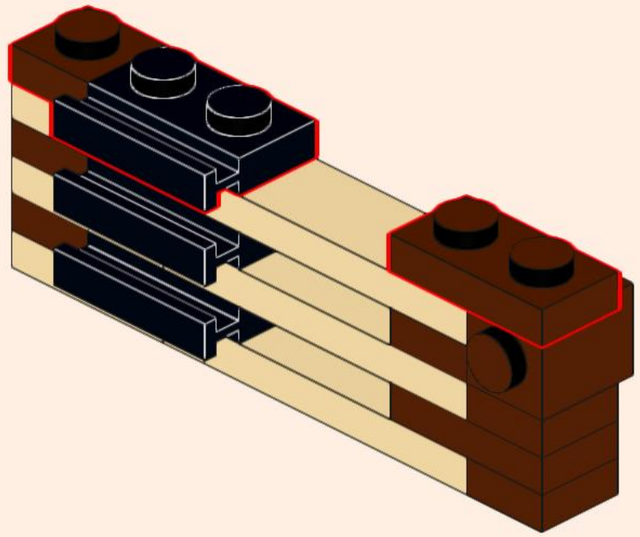

26

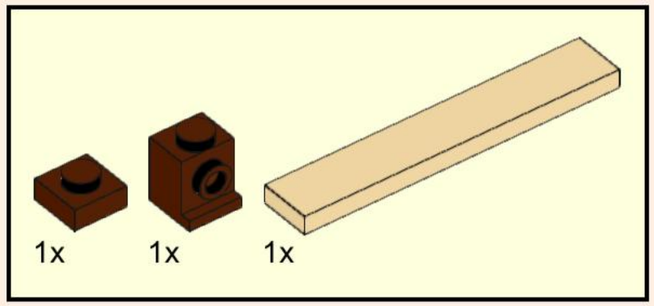

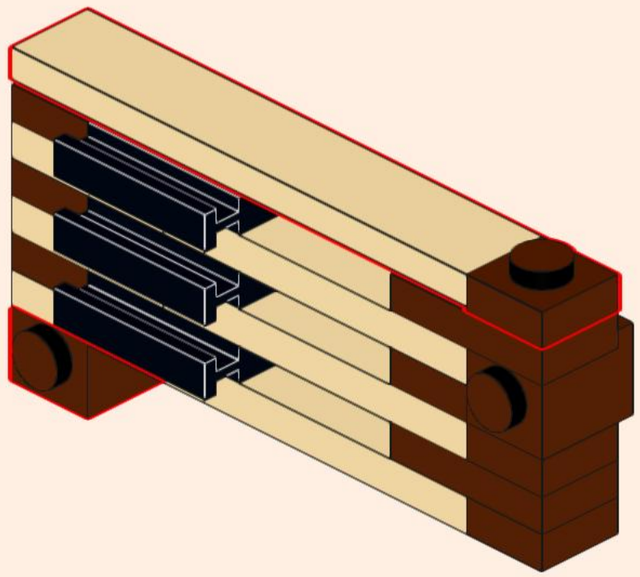

27

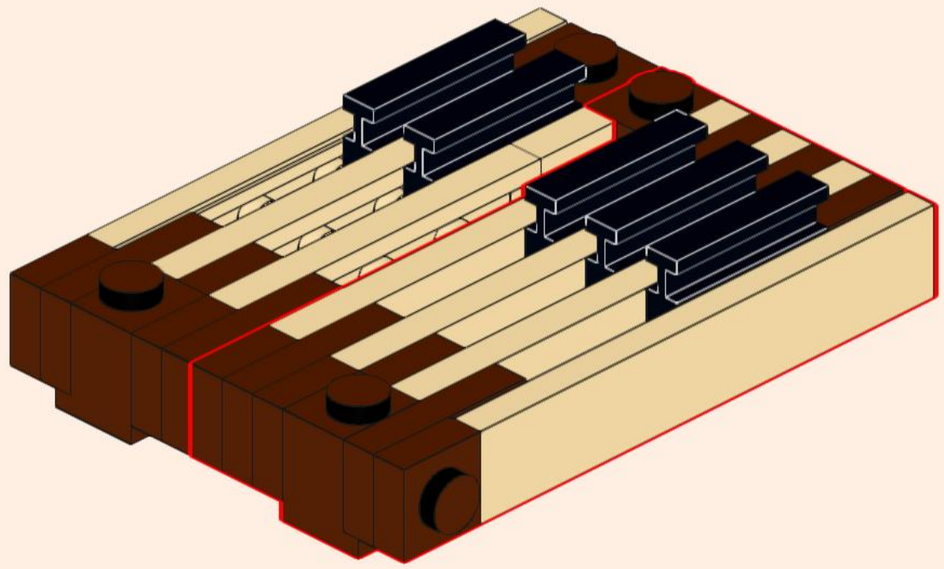

28

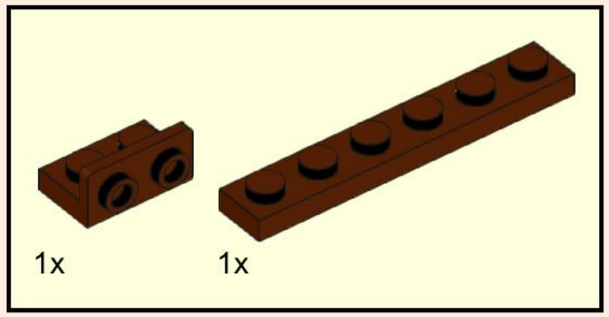

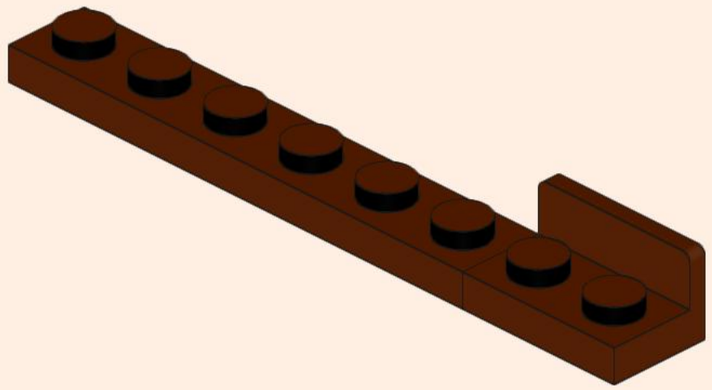

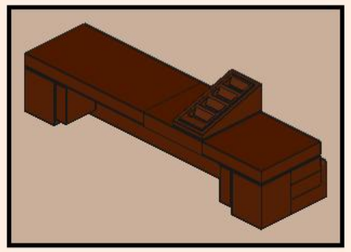

29

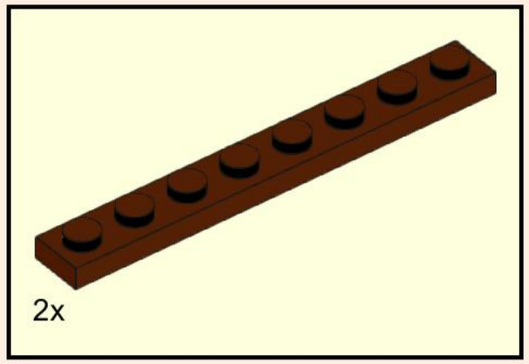

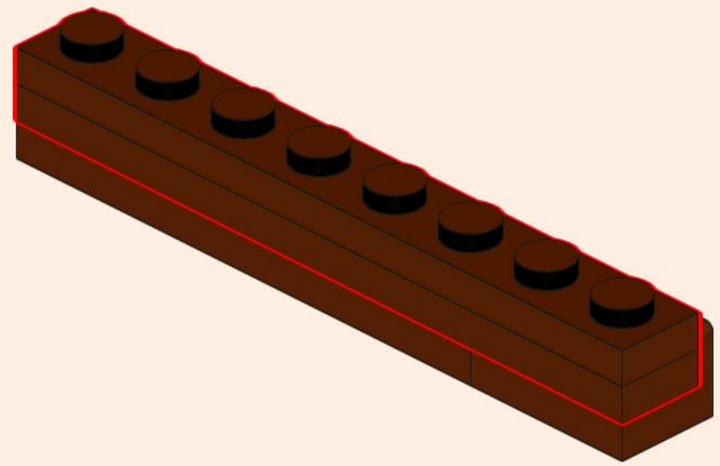

30

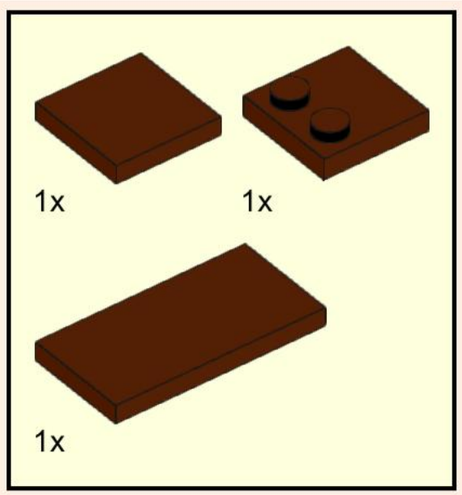

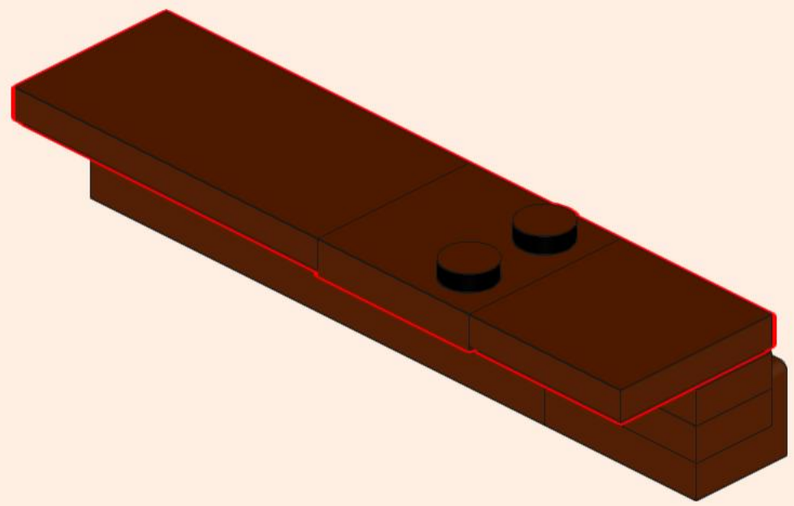

31

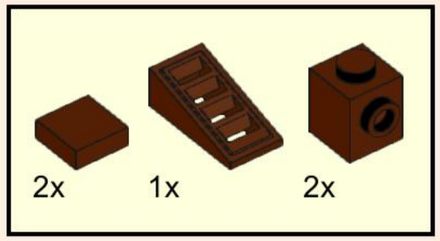

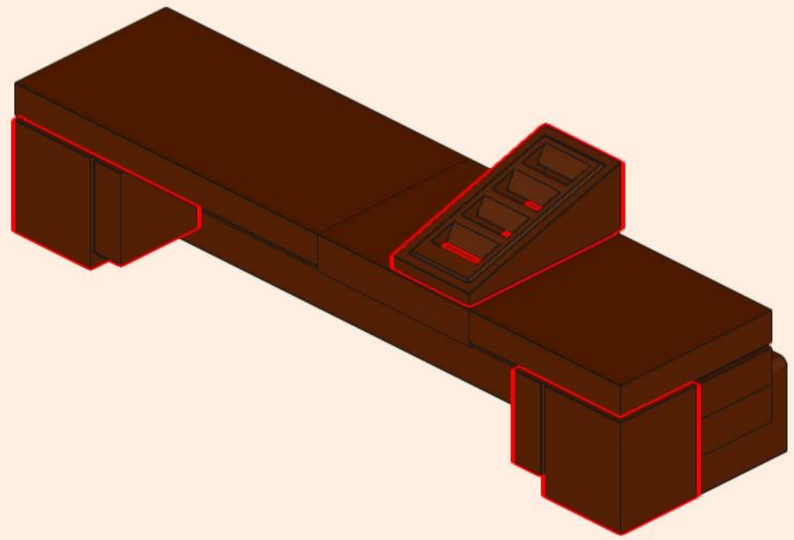

32

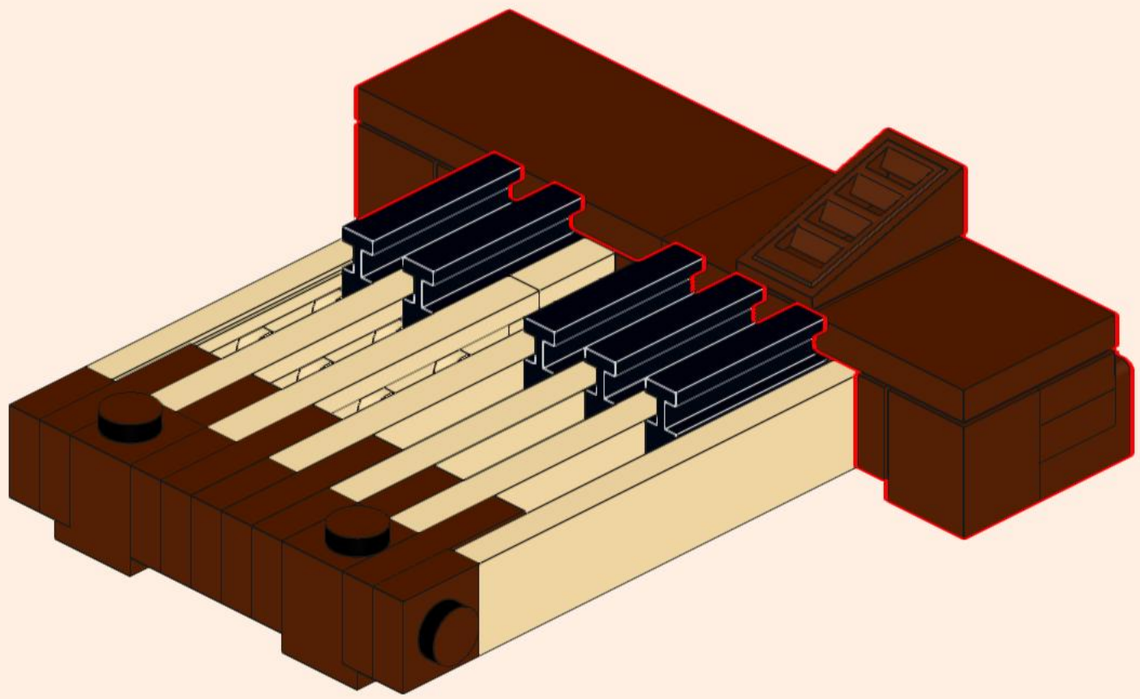

33

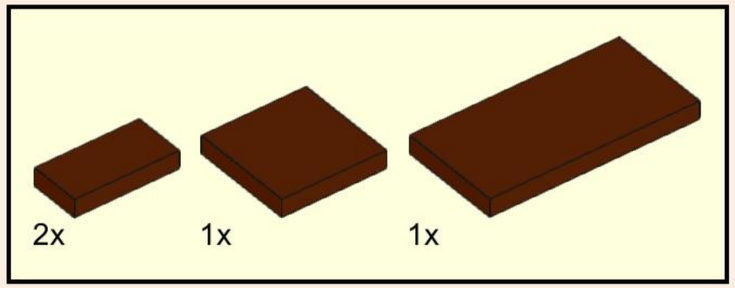

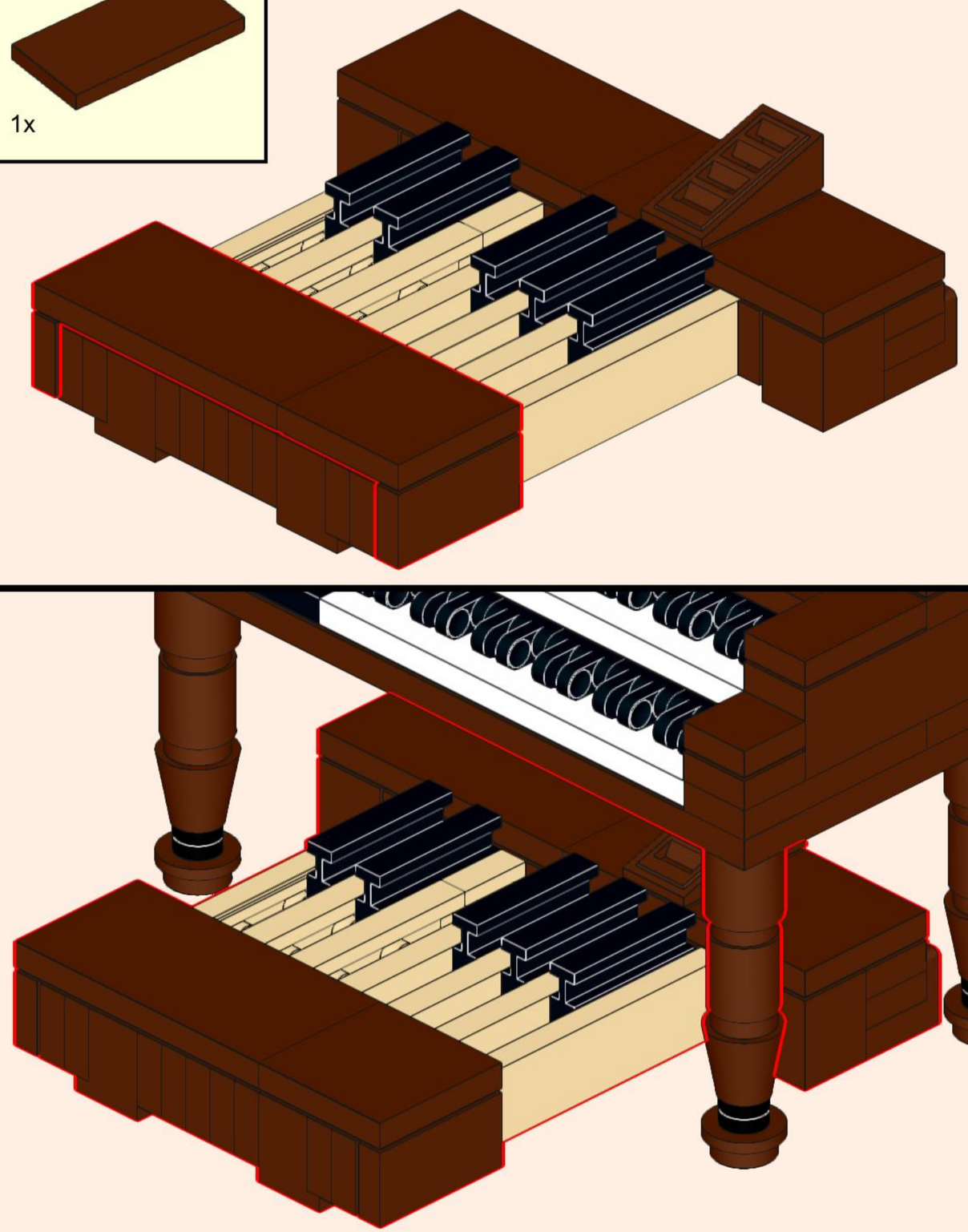

34

35

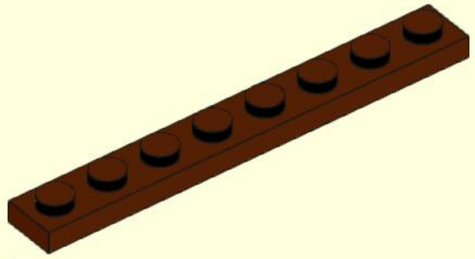

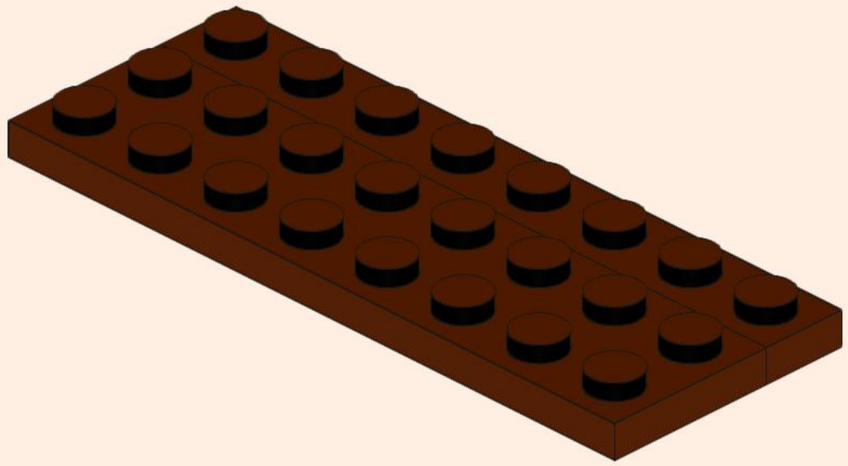

36

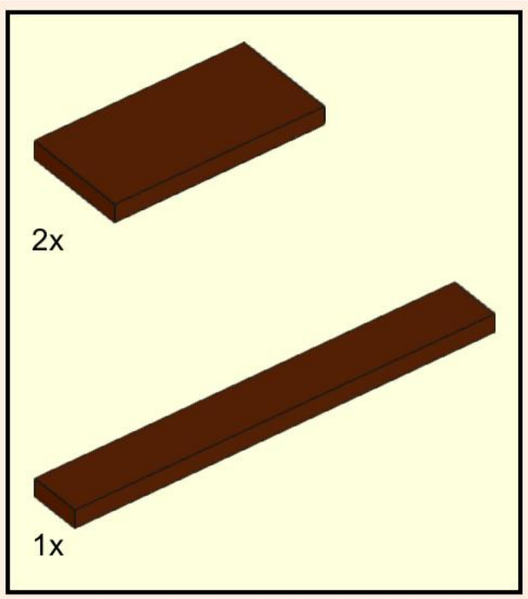

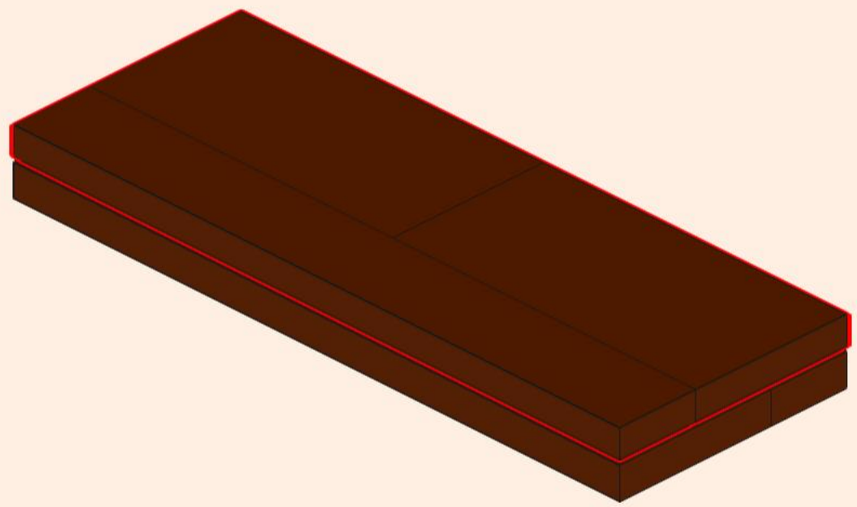

37

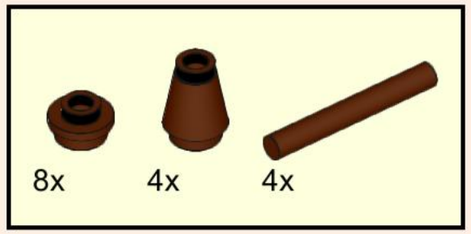

Note:
Assemble the legs on a plate so that the underside can be mounted onto a plate later on as well.
This will also ensure the right spacing between the parts.

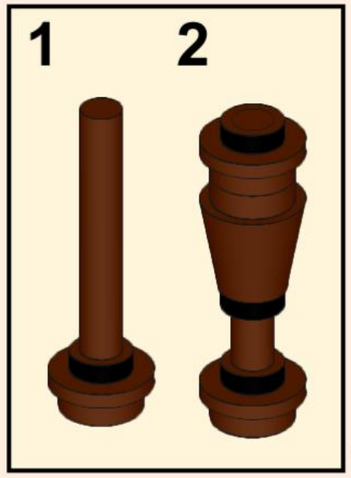

4x

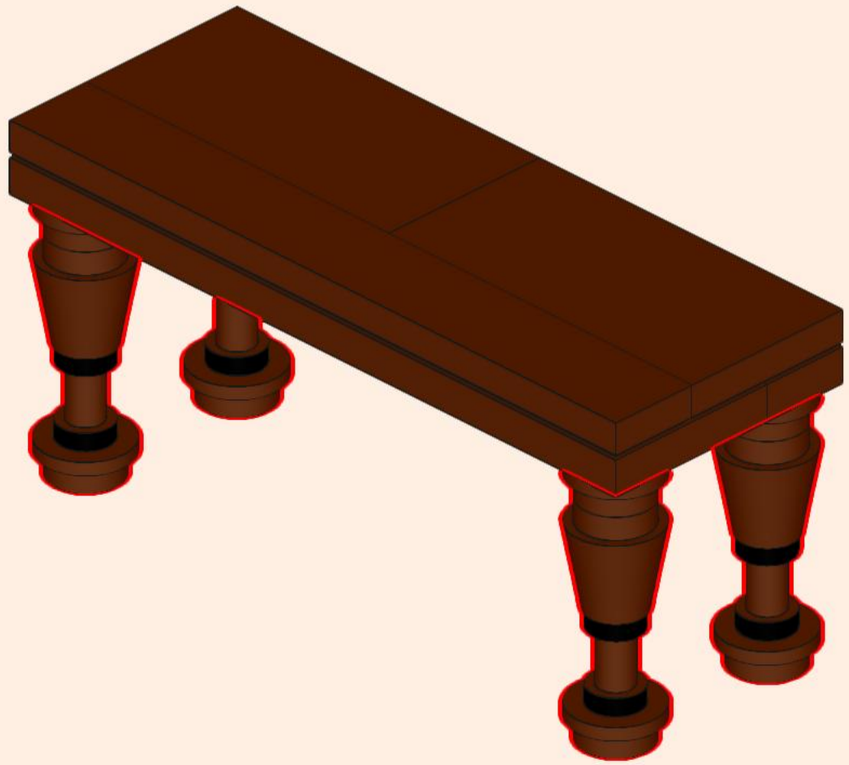

38

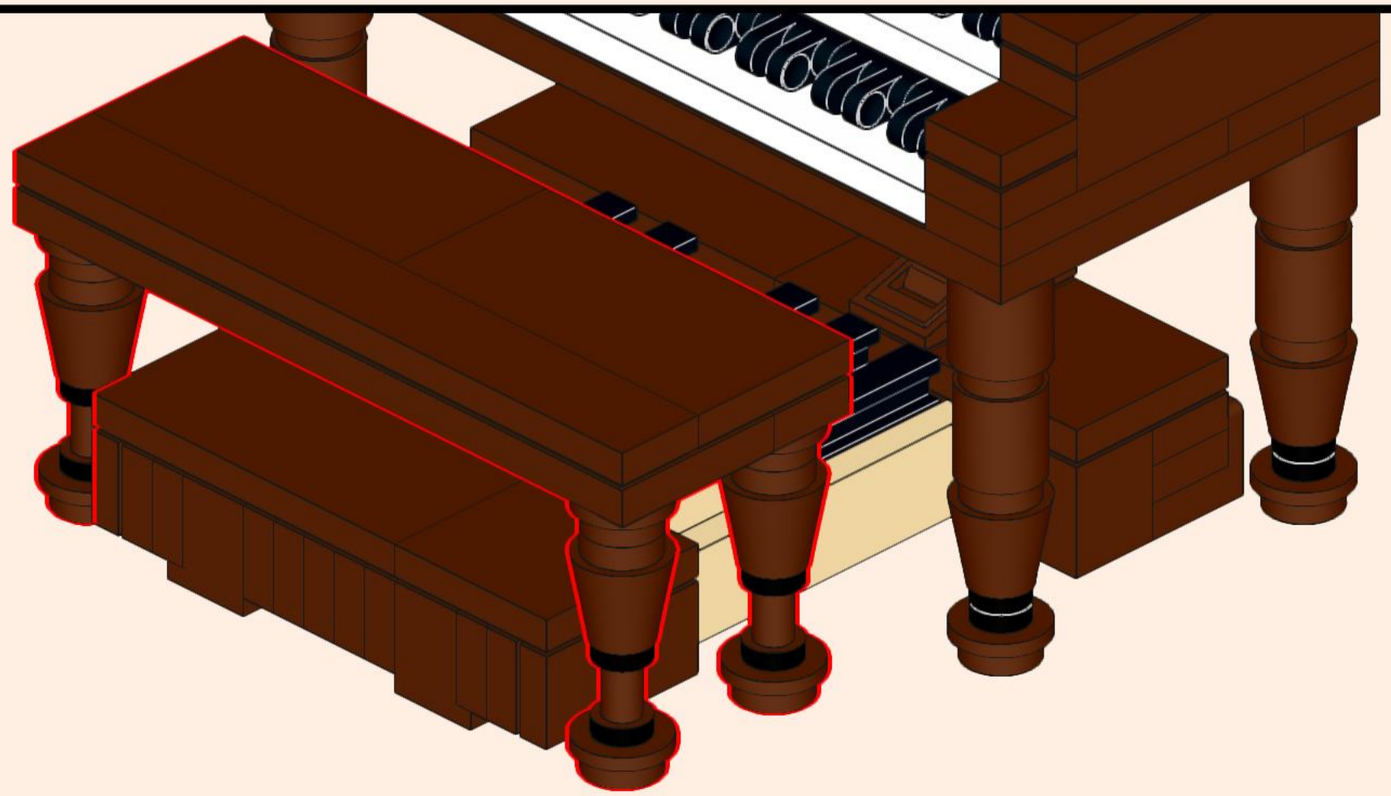

39

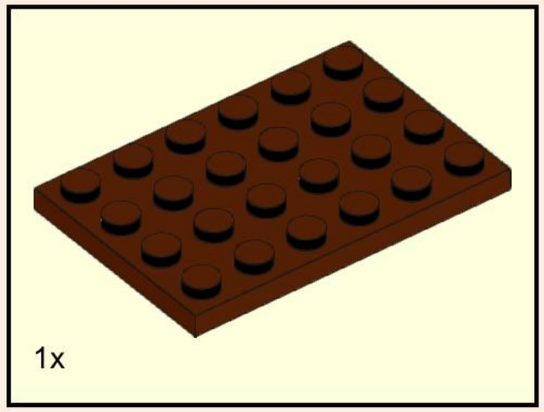

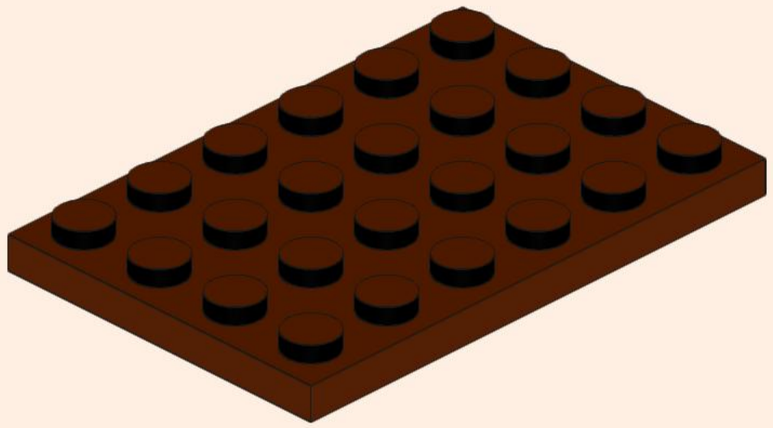

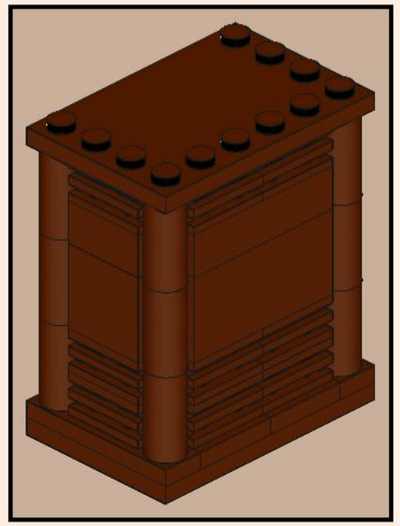

40

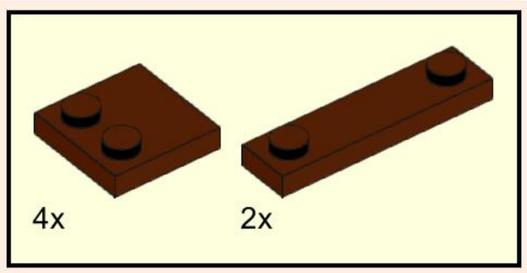

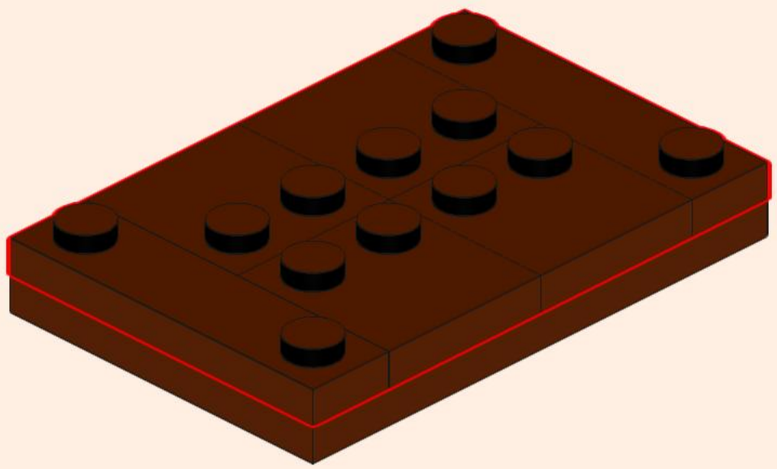

41

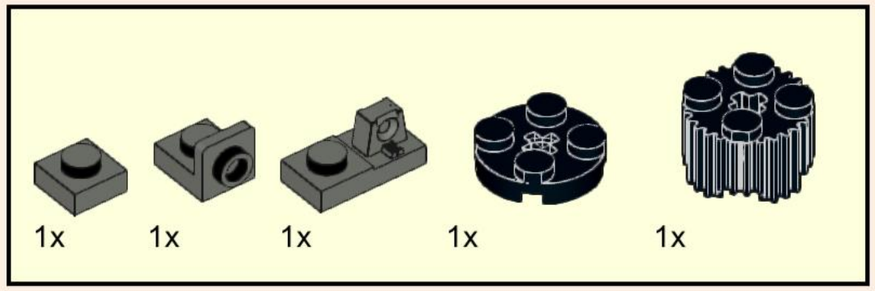

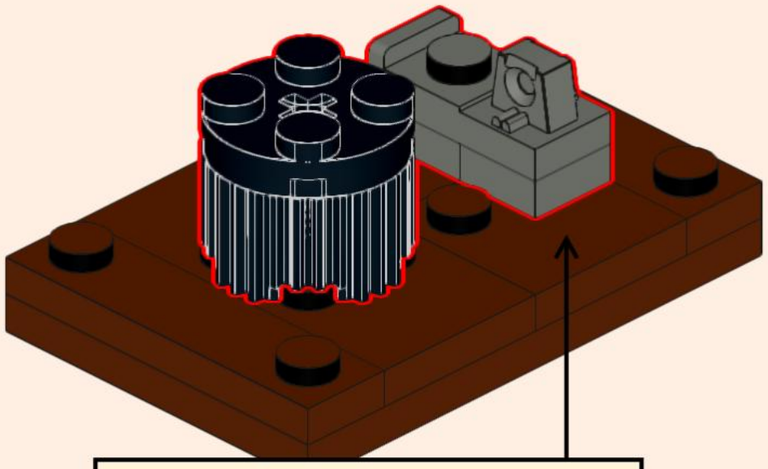

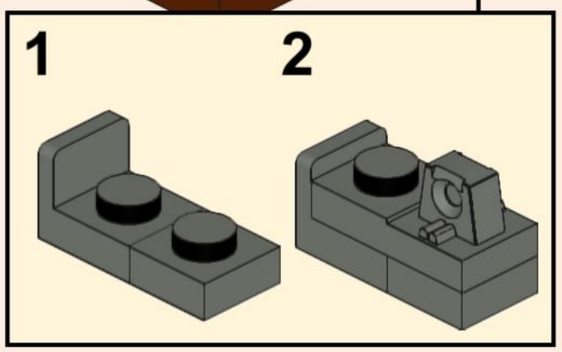

42

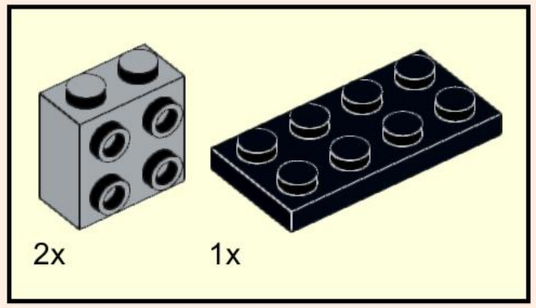

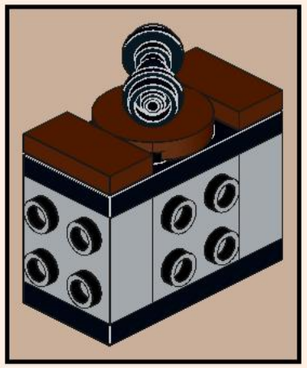

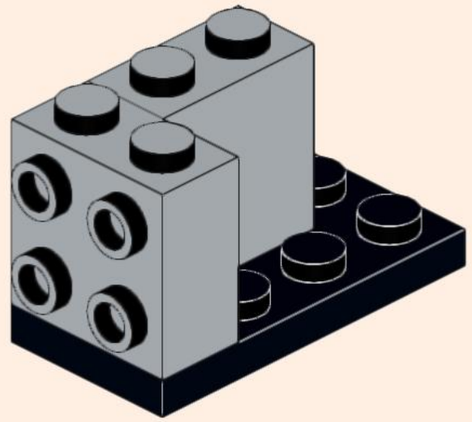

43

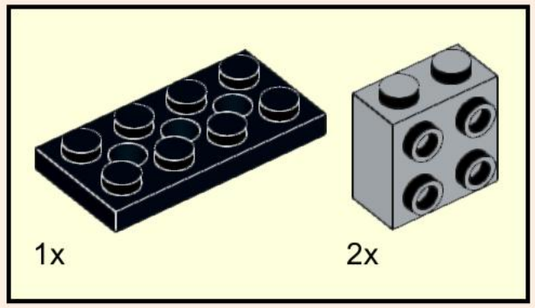

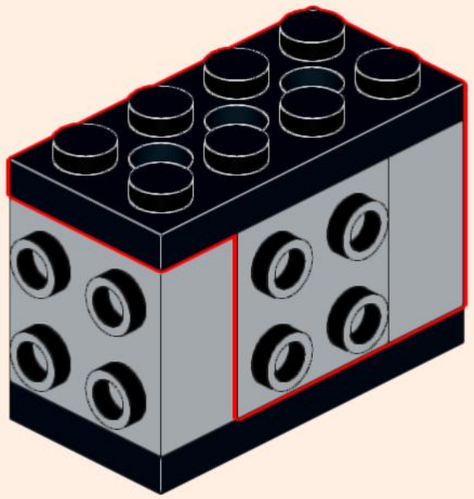

44

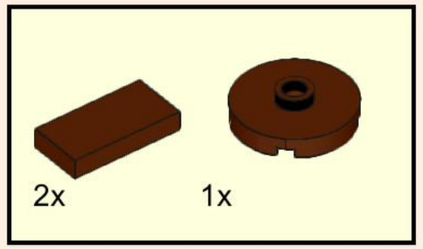

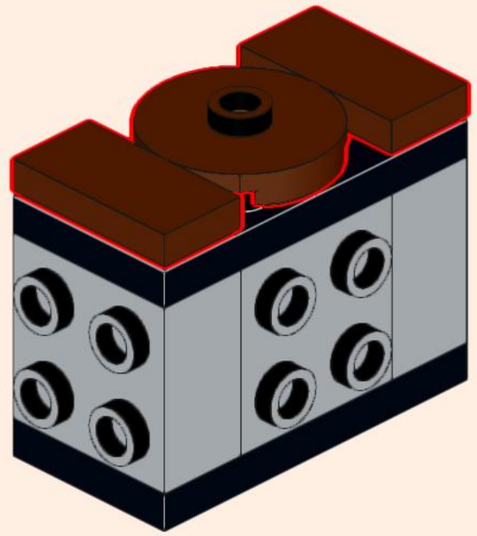

45

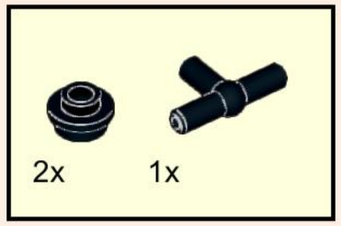

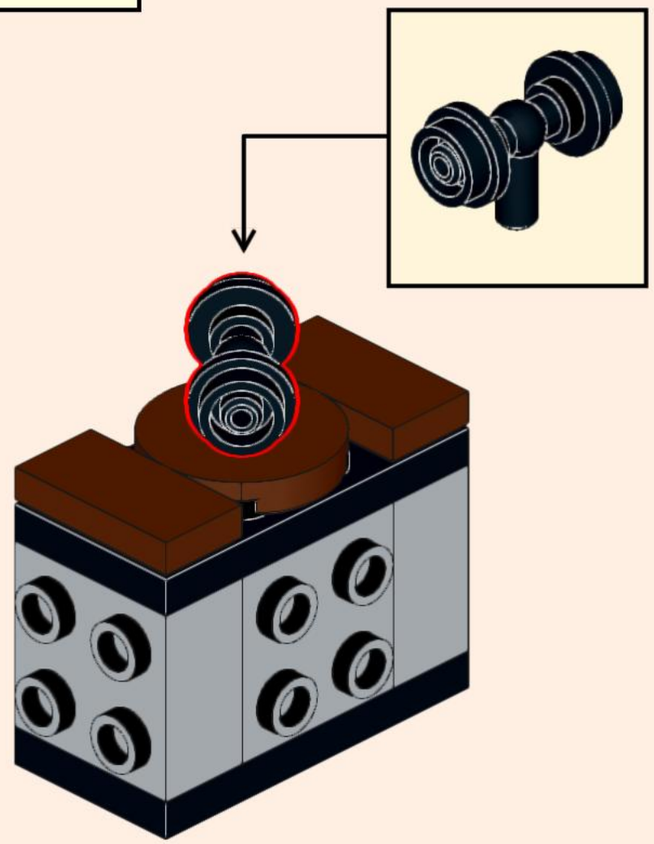

46

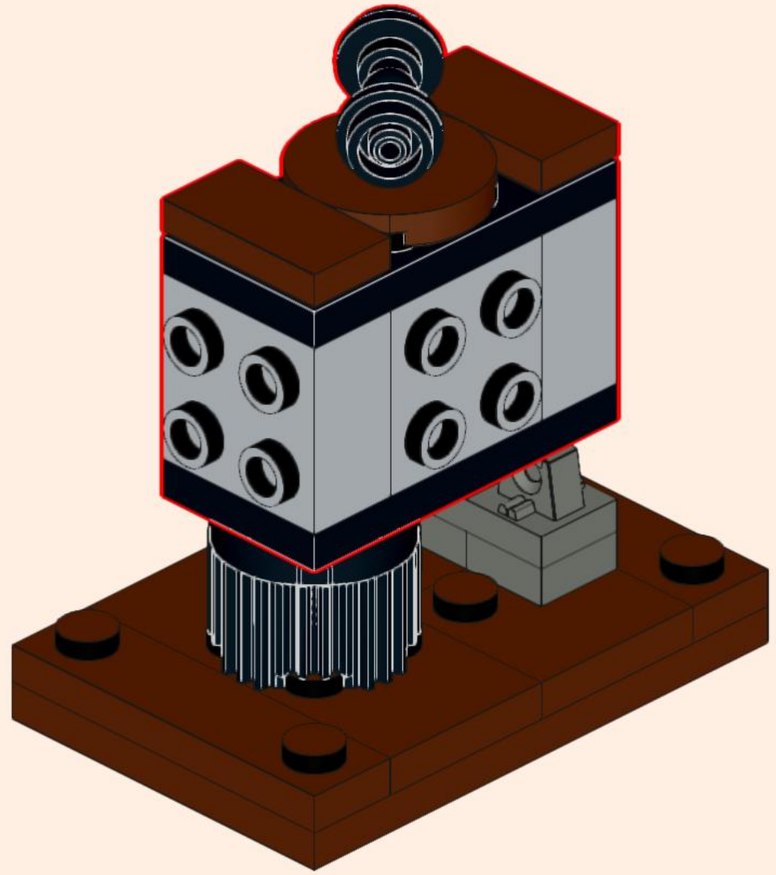

47

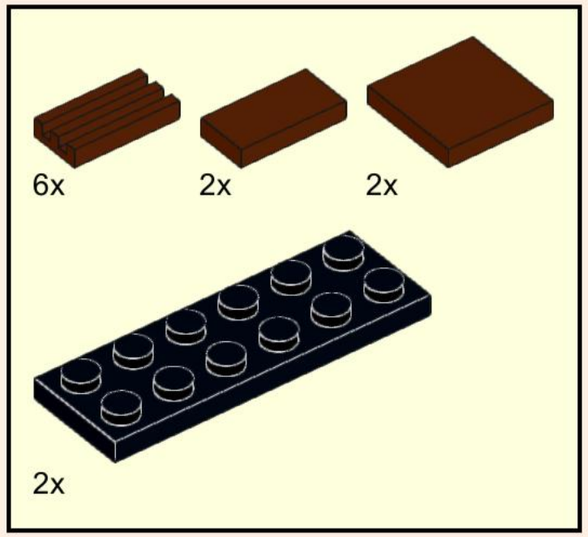

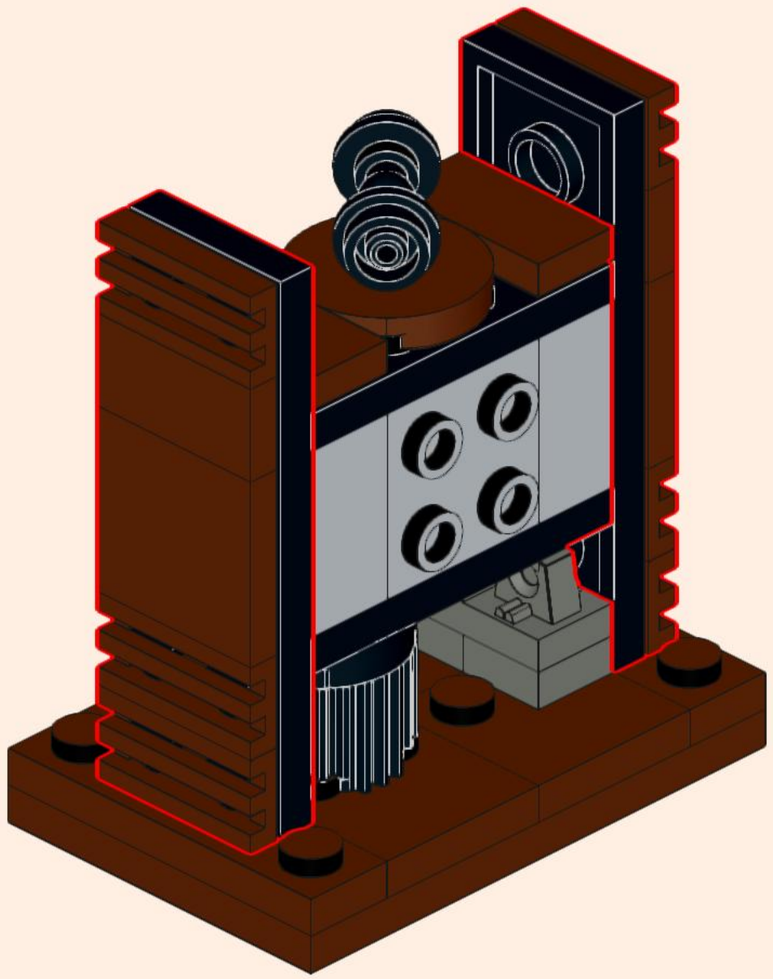

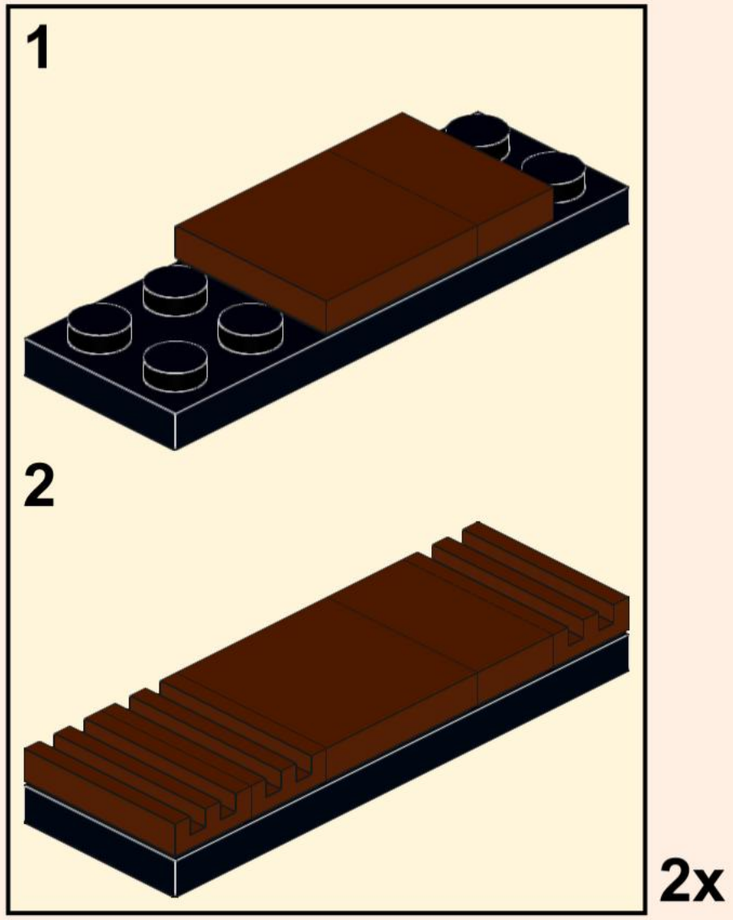

48

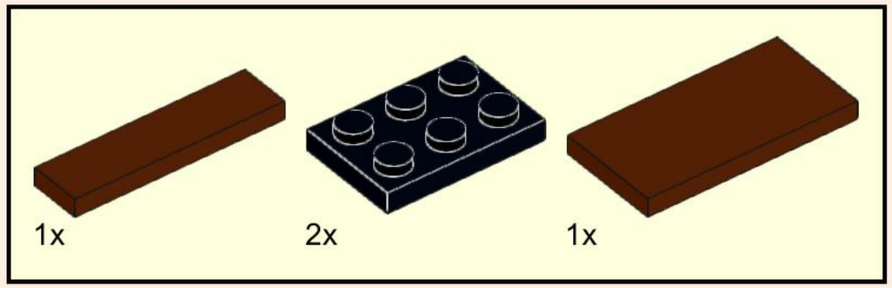

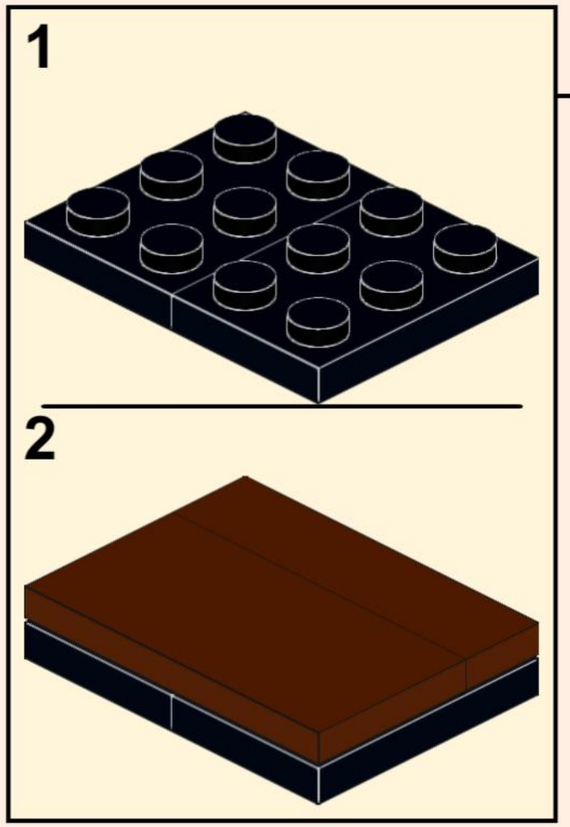

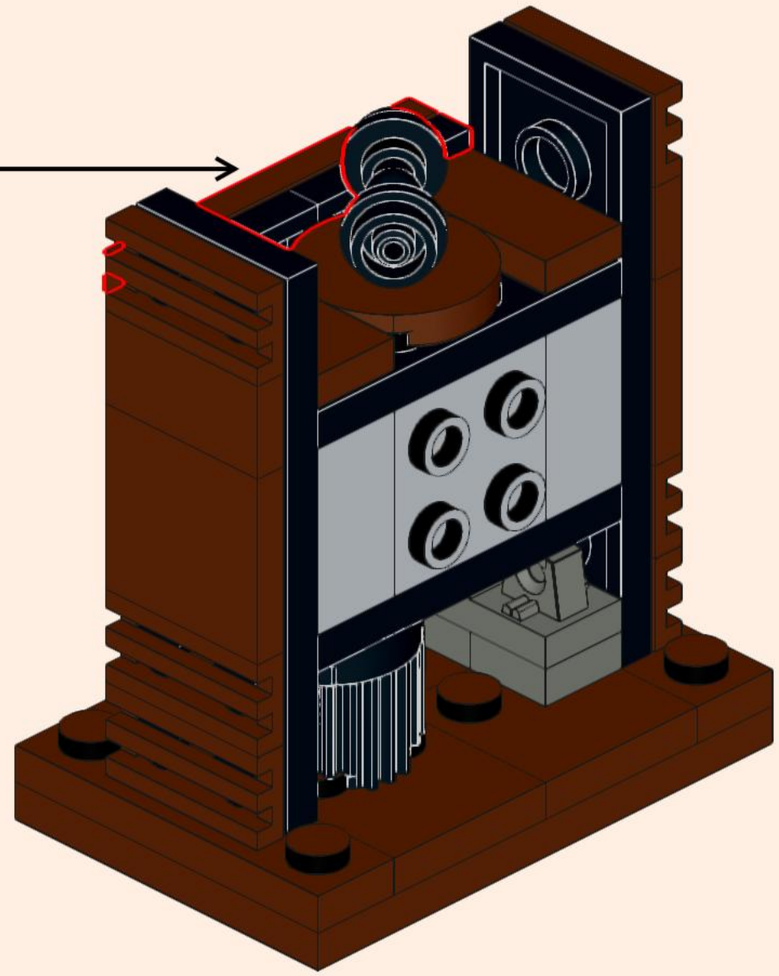

49

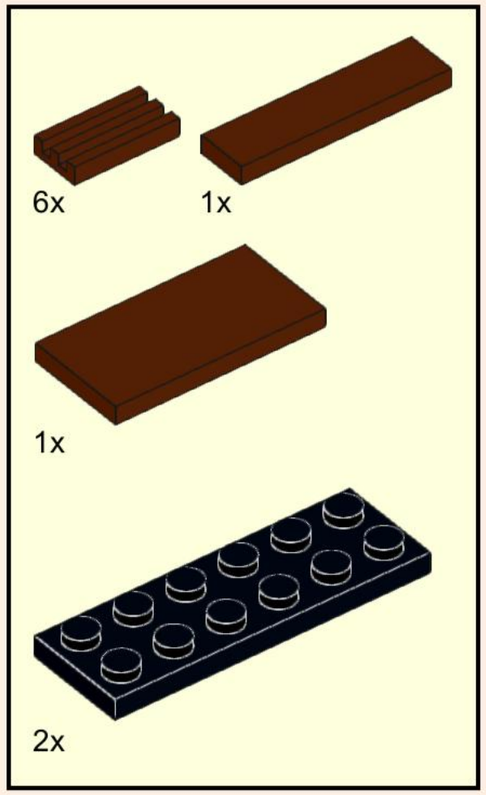

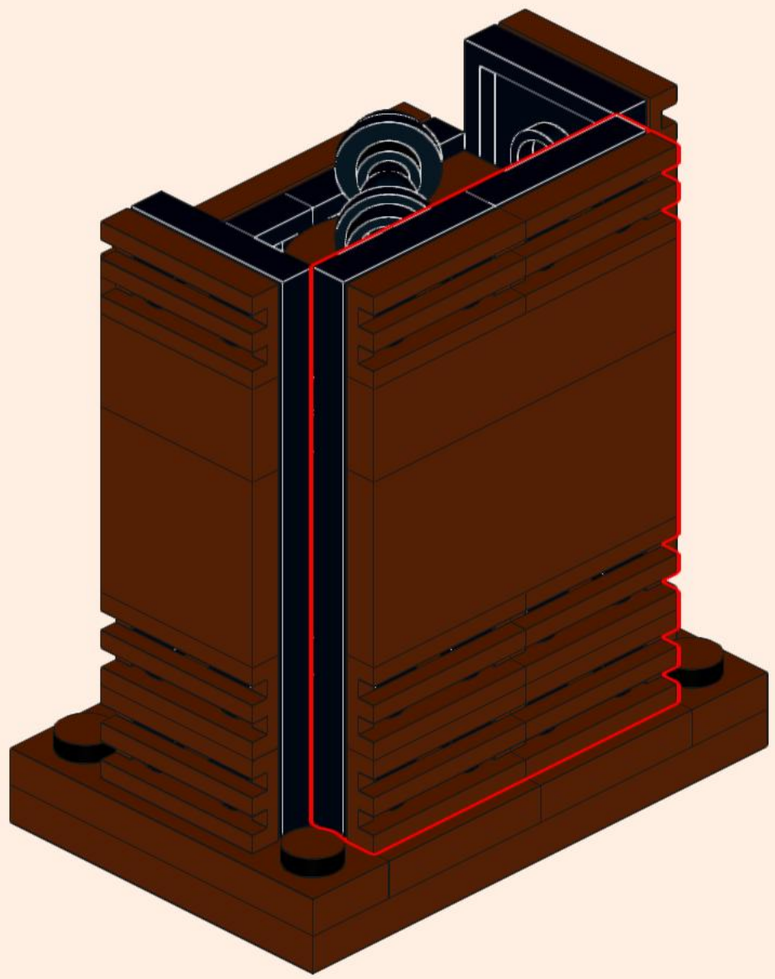

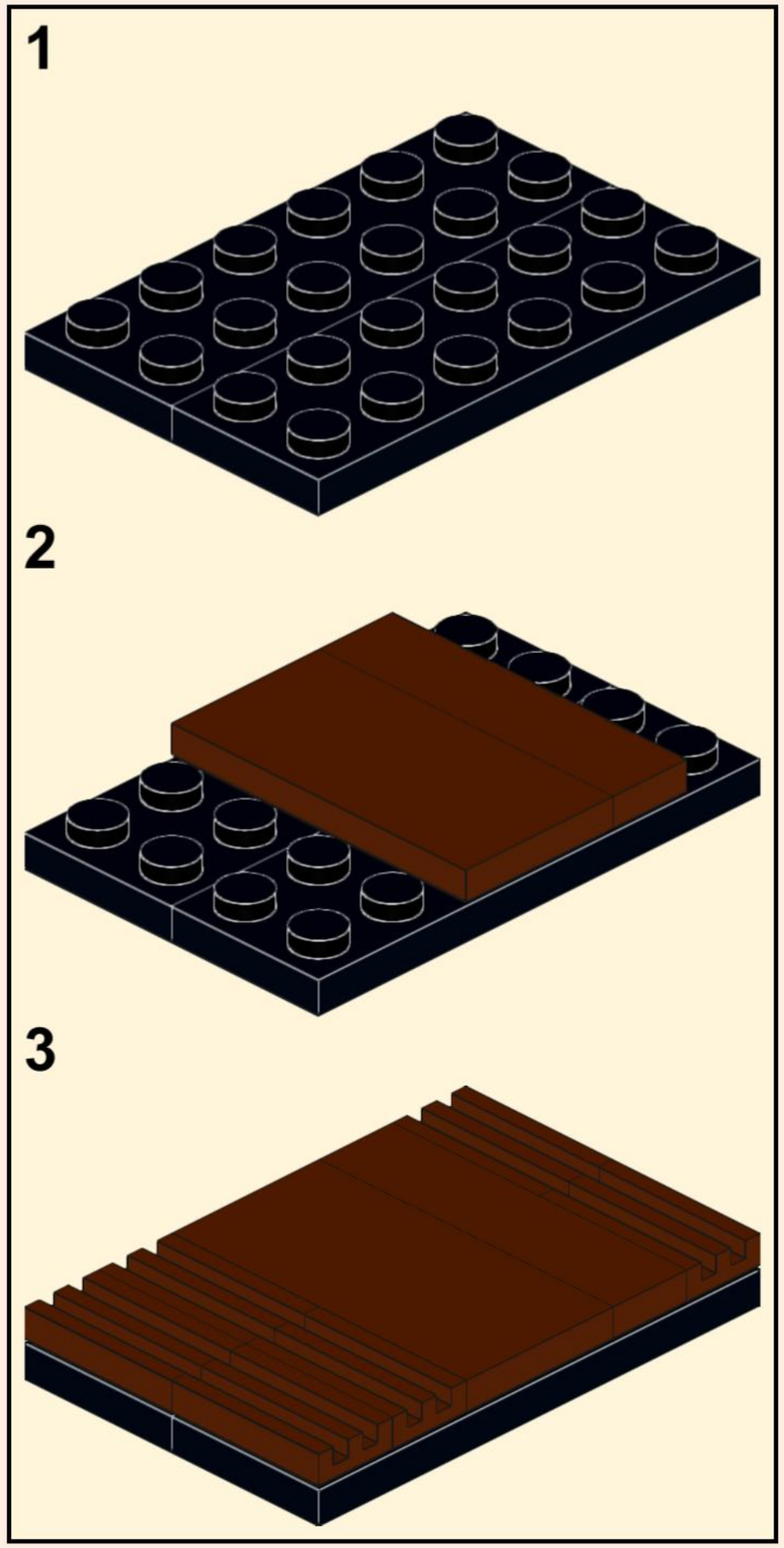

50

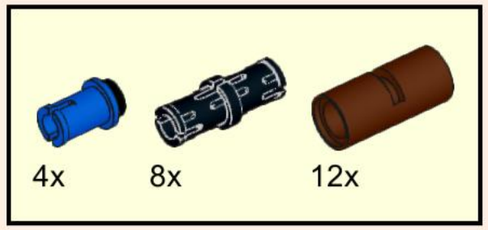

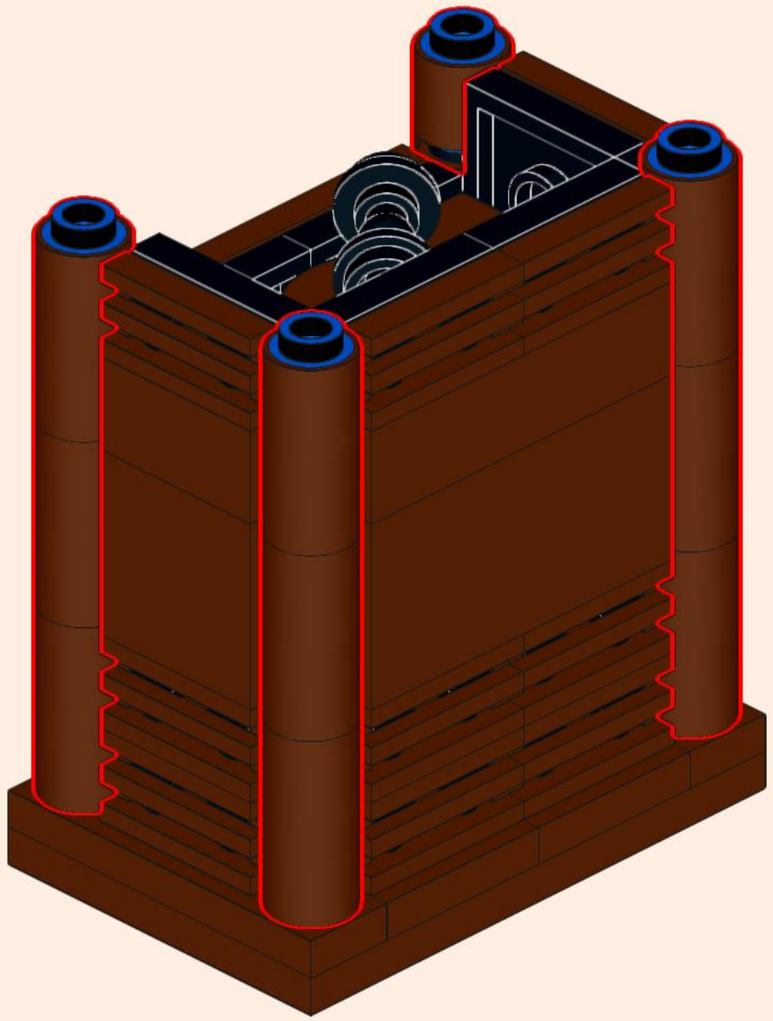

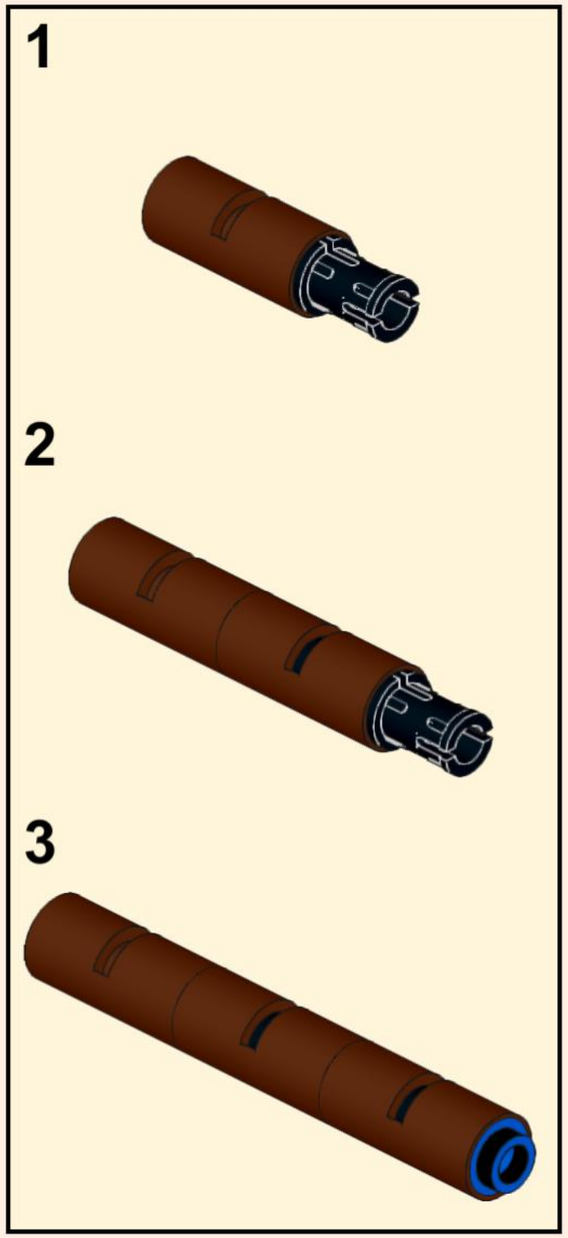

51

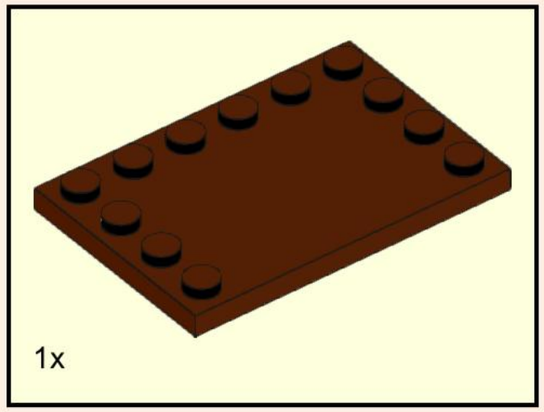

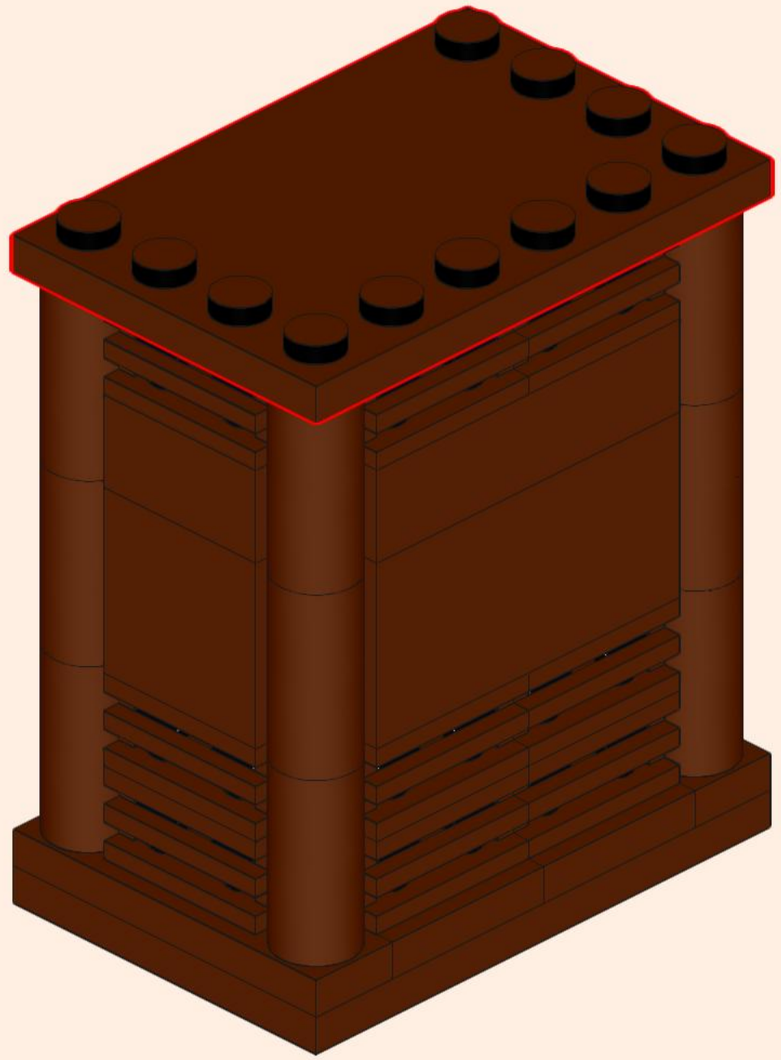
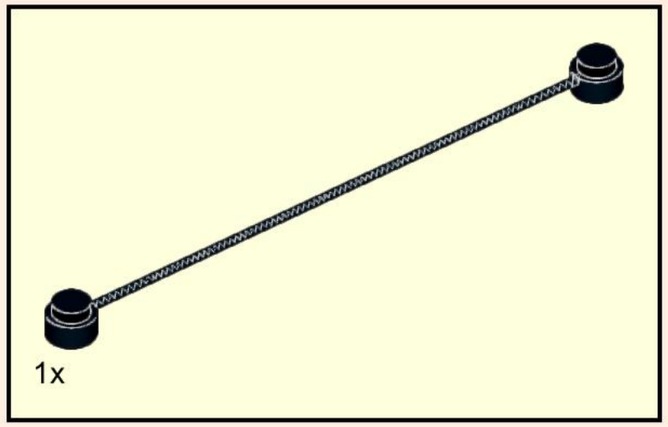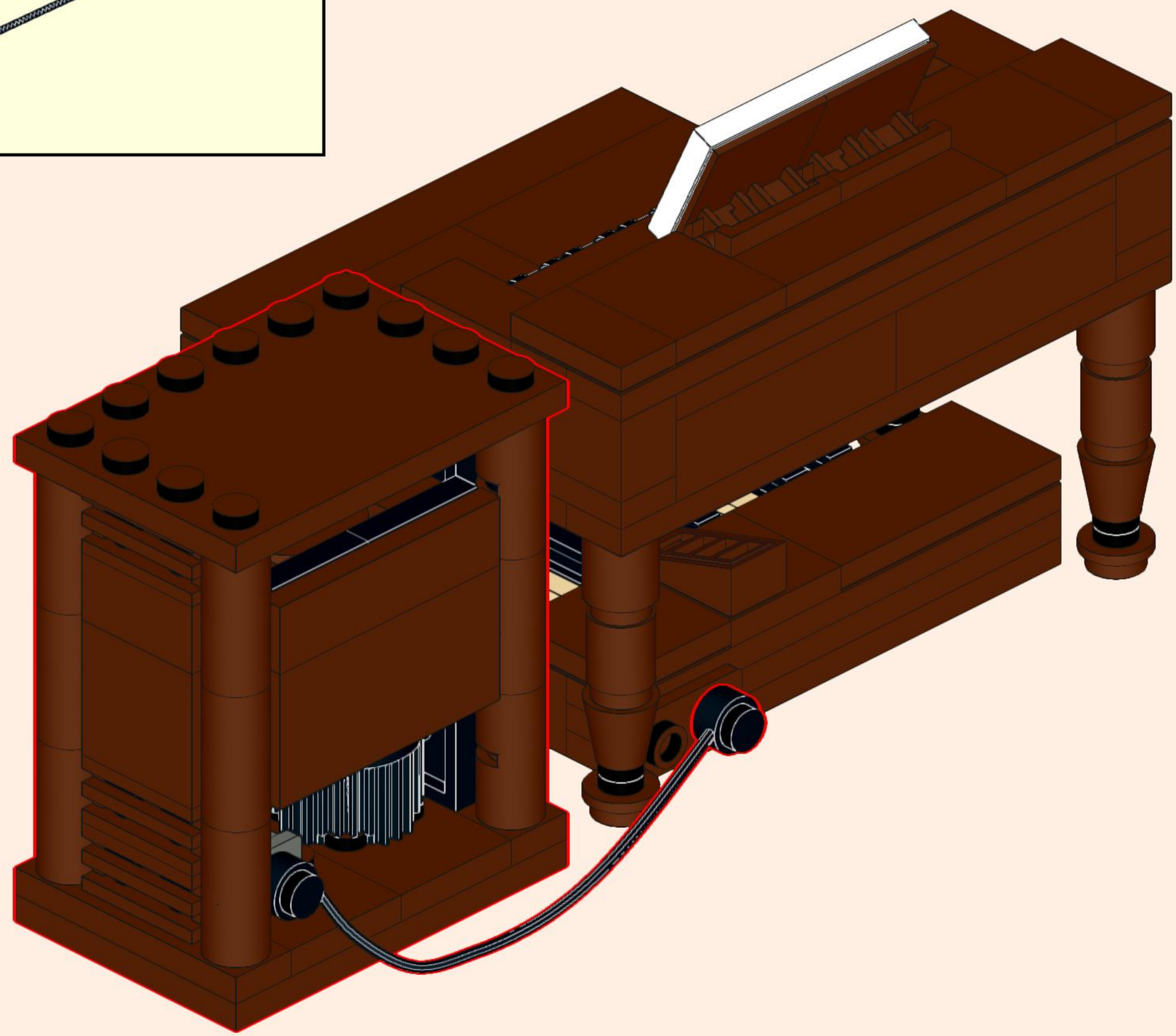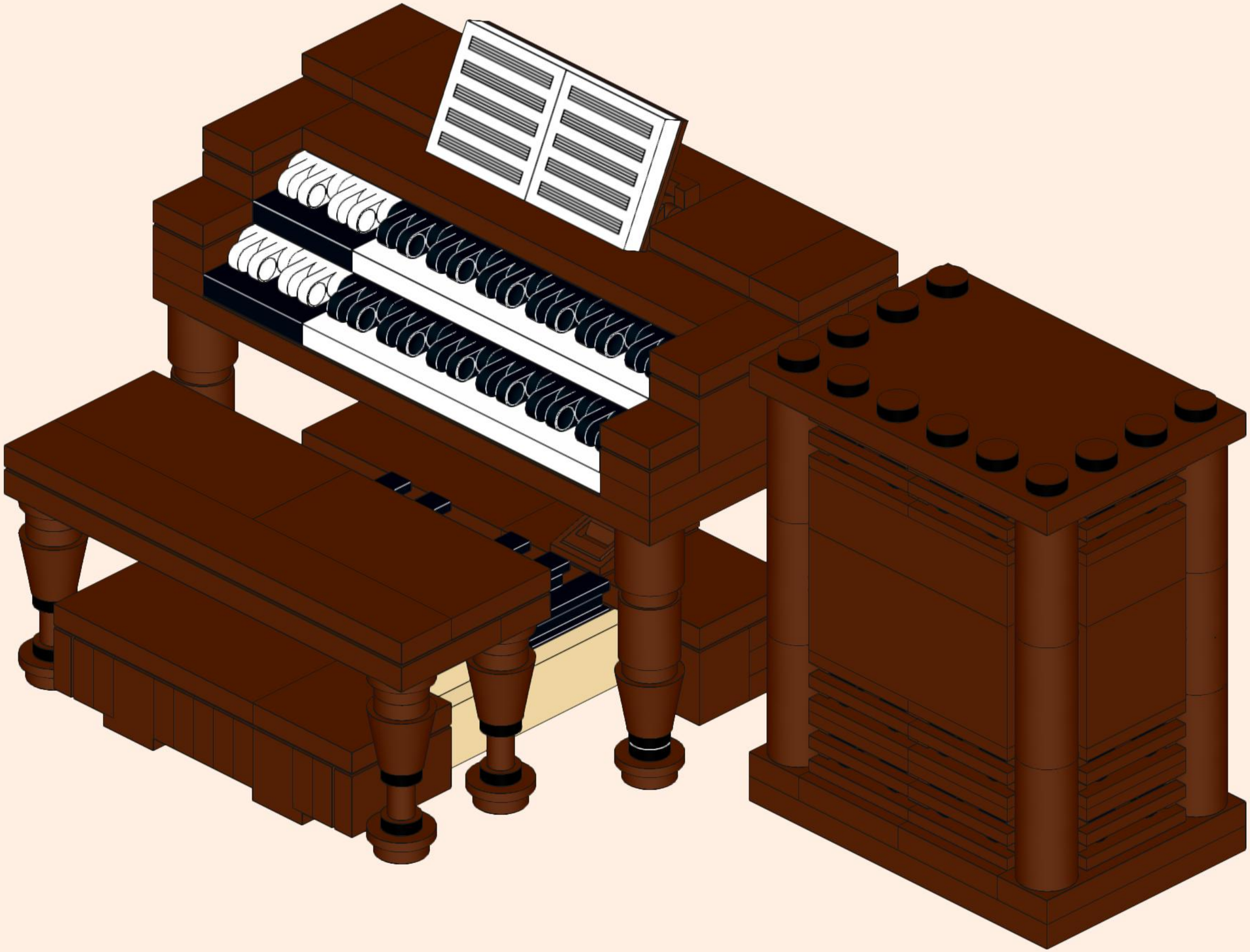
52