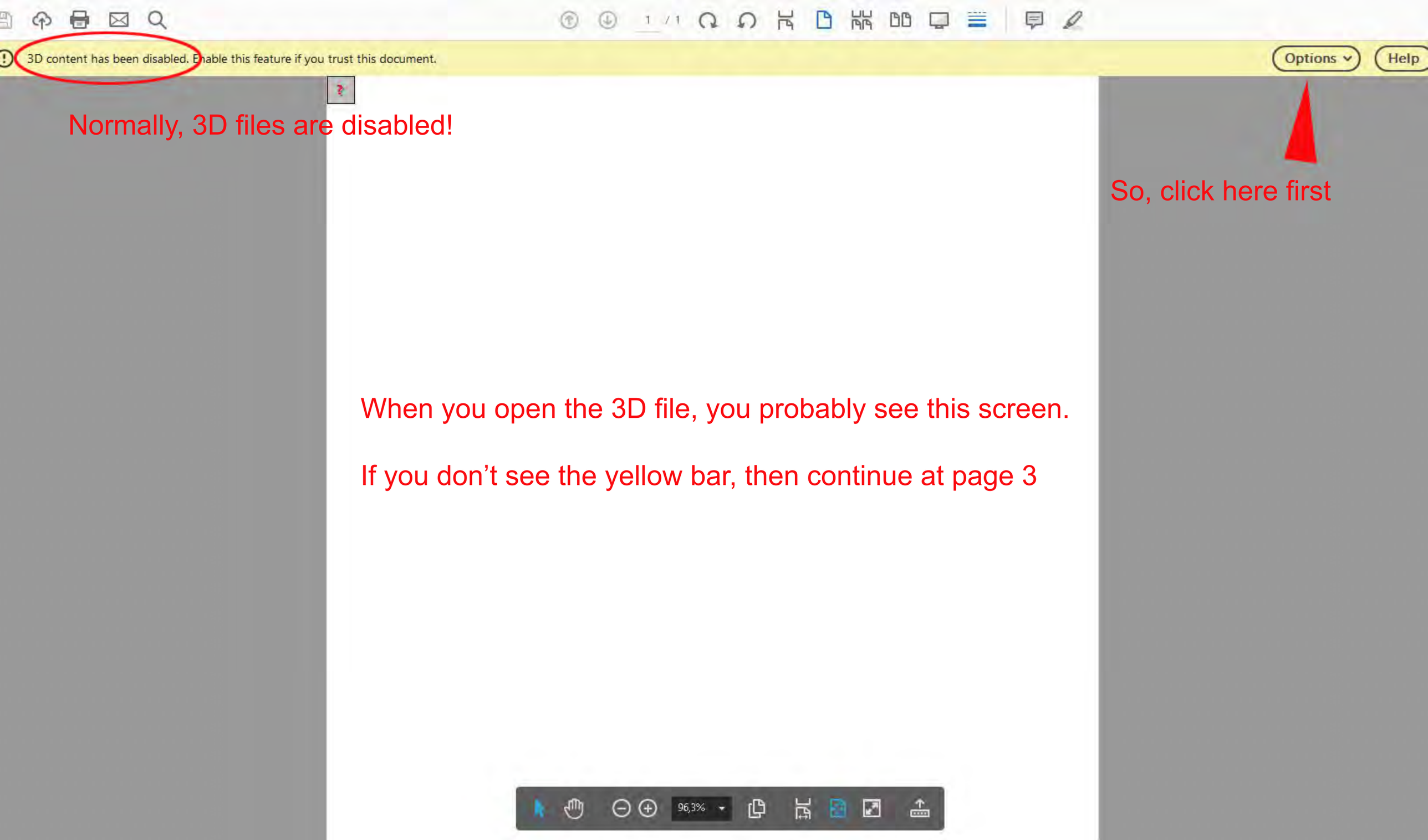
3D content has been disabled. Enable this feature if you trust this document.
Options
Help
Normally, 3D files are disabled!
So, click here first
When you open the 3D file, you probably see this screen.
If you don't see the yellow bar, then continue at page 3
96,3%

Test.pdf - Adobe Acrobat Reader DC

File Edit View Window Help

Home Tools Test.pdf

Sign In

Share

3D content has been disabled. Enable this feature if you trust this document.

Options Help

Trust this document one time only

Trust this document always

点击左上角的问号，选择总是信任

First click: Trust this document always and then click the ?

If the file still does not appear, go to the next instruction.

Export PDF

Convert PDF Files to Word or Excel Online

Select PDF File

Test.pdf

Convert to

Microsoft Word (*.docx)

Document Language:
English (U.S.) Change

Convert

Create PDF

Edit PDF

Comment

Combine Files

Organize Pages

Redact

Protect

Optimize PDF

Convert and edit PDFs with Acrobat Pro DC

Start Free Trial

96,3%

10:26

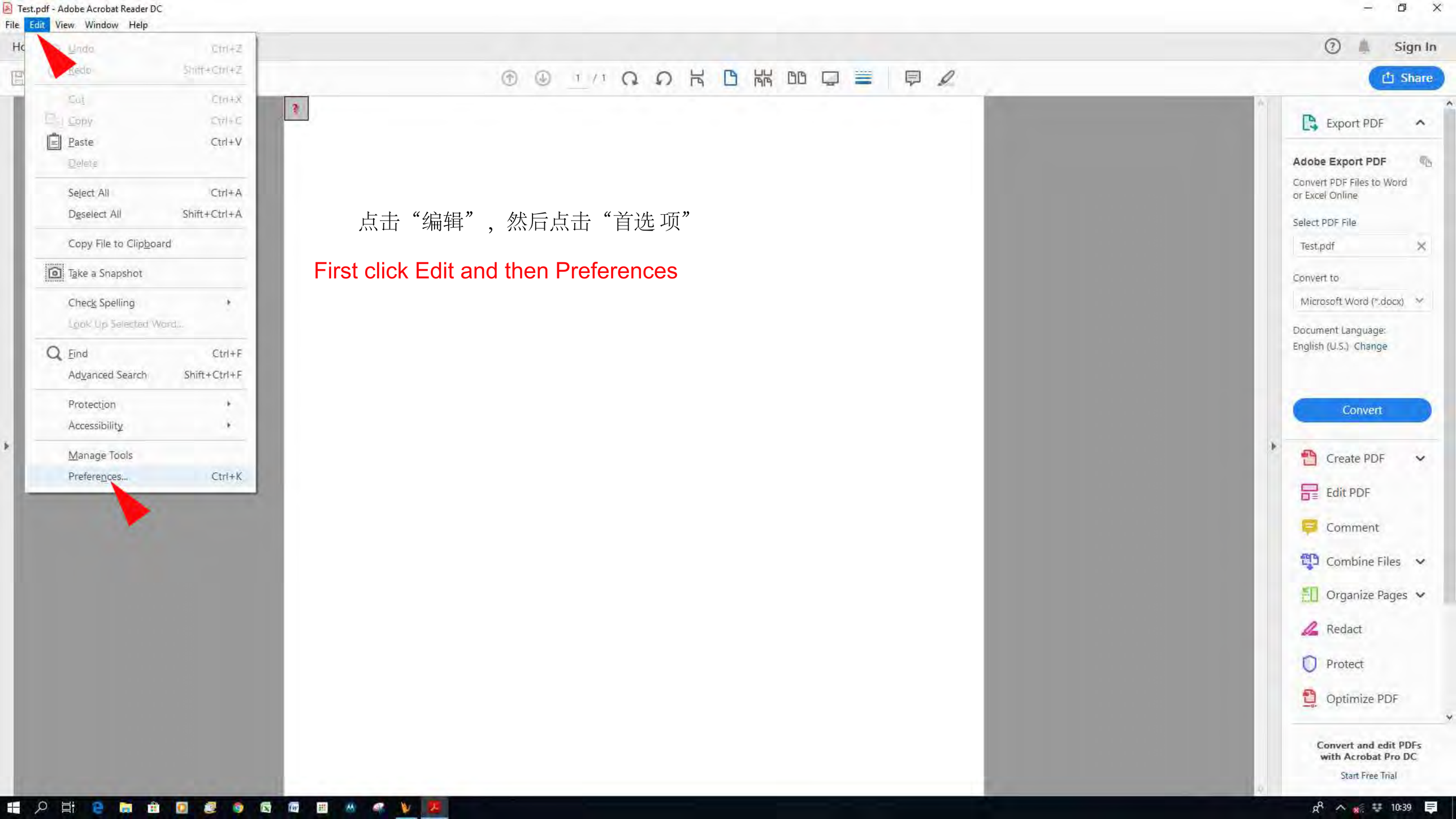
Test.pdf - Adobe Acrobat Reader DC
File
Edit
View
Window
Help
Undo Ctrl+Z
Redo Shift+Ctrl+Z
Cut Ctrl+X
Copy Ctrl+C
Paste Ctrl+V
Delete
Select All Ctrl+A
Deselect All Shift+Ctrl+A
Copy File to Clipboard
Take a Snapshot
Check Spelling
Look Up Selected Word...
Find Ctrl+F
Advanced Search Shift+Ctrl+F
Protection
Accessibility
Manage Tools
Preferences... Ctrl+K
Sign In
Share
Export PDF
Adobe Export PDF
Convert PDF Files to Word or Excel Online
Select PDF File
Test.pdf
Convert to
Microsoft Word (*.docx)
Document Language:
English (U.S.) Change
Convert
Create PDF
Edit PDF
Comment
Combine Files
Organize Pages
Redact
Protect
Optimize PDF
Convert and edit PDFs with Acrobat Pro DC
Start Free Trial
点击“编辑”，然后点击“首选 项”
First click Edit and then Preferences

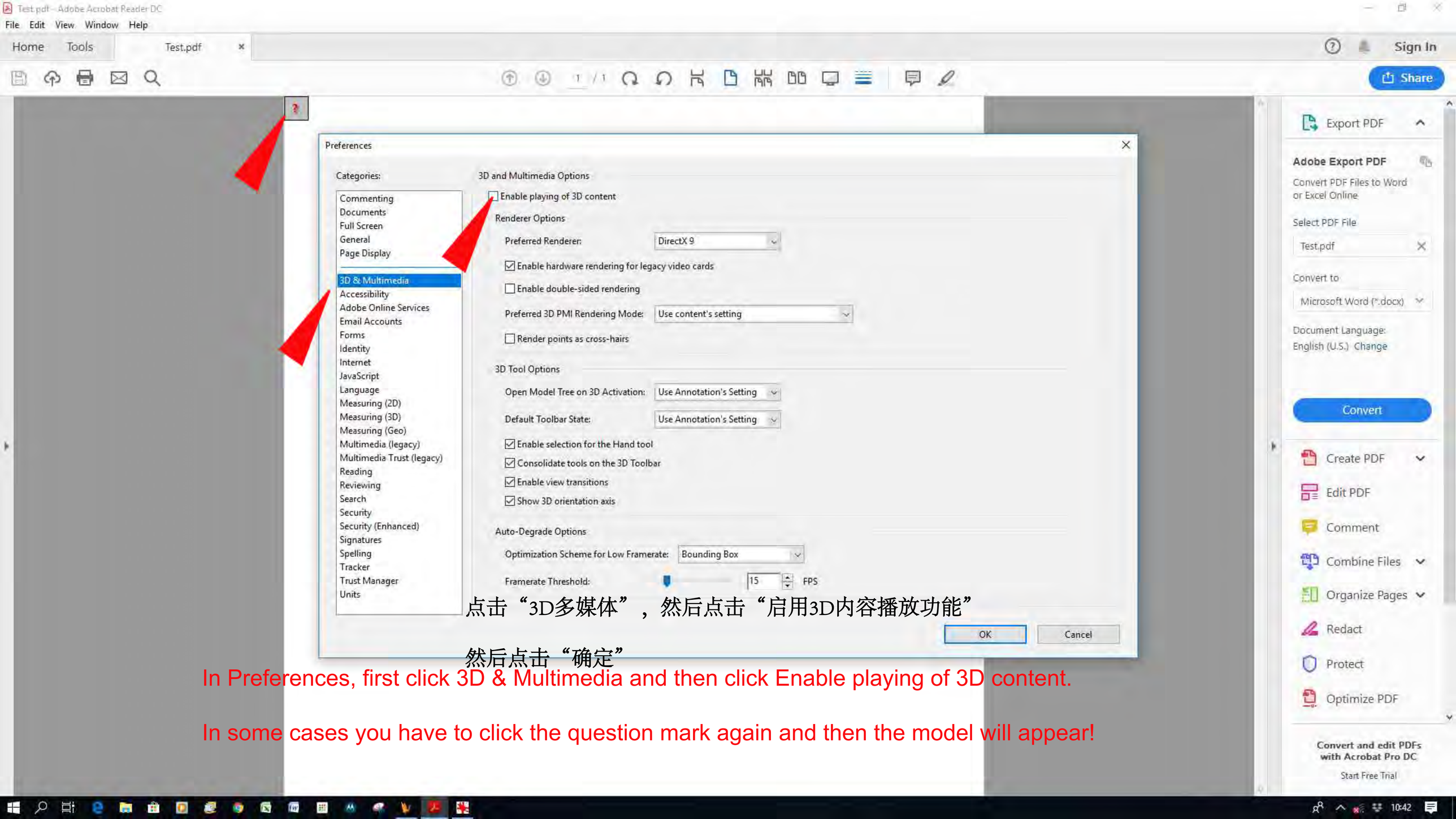

点击“3D多媒体”，然后点击“启用3D内容播放功能”

然后点击“确定”

In Preferences, first click 3D & Multimedia and then click Enable playing of 3D content.

In some cases you have to click the question mark again and then the model will appear!

拼搭说明

How to use the Bugatti 3D-PDF building instructions

If you open a 3D-PDF in Acrobat Reader for the first time, then you have to follow the next steps:
See also the PDF: Instructions how to open 3D files.

- Click *Options* to *Trust this document always*
- Click the Question mark
- Click *Edit* and then in the window click *Preferences*
- In the next window click *3D & Multimedia*
- Click the box in front of *Enable playing of 3D content*
- Click the Question mark again if screen stays empty
-

Now you can start!

You will build the model in separate sub-assemblies and build those together in the proces.

Open the first Sub-Assembly: Bug-100-Frame Right.

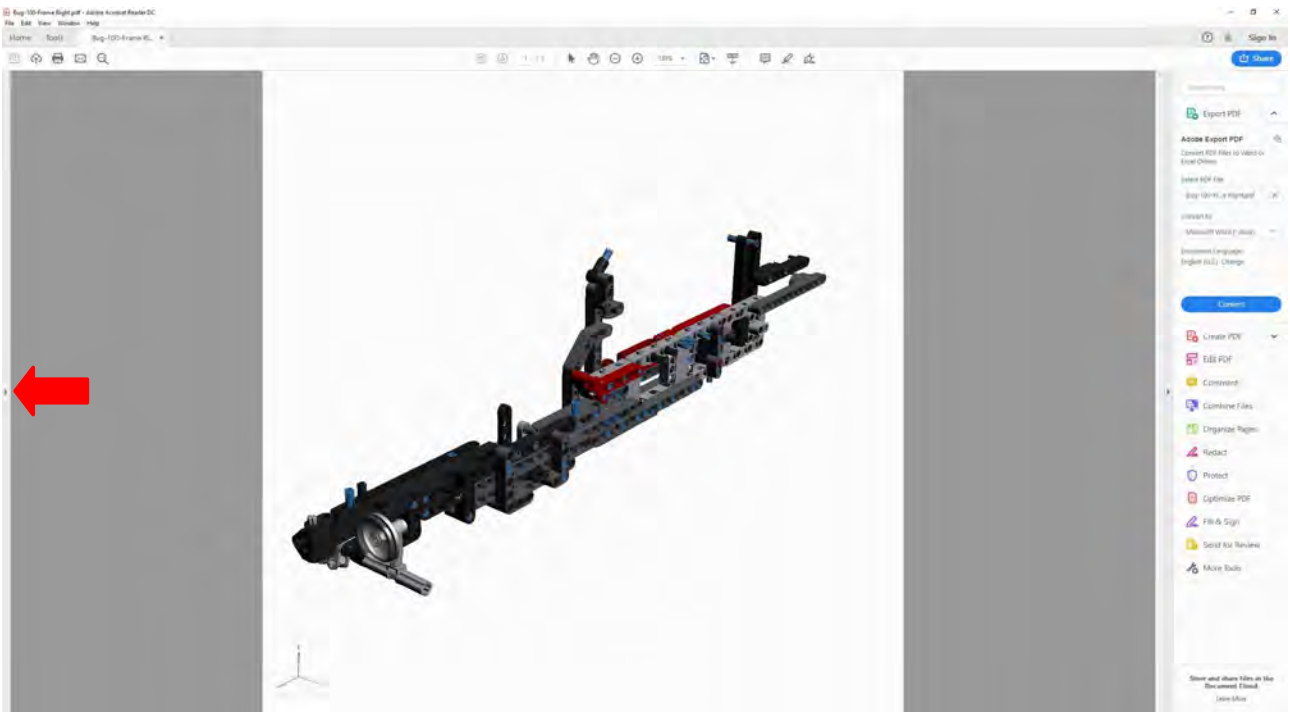

点击红色箭头，打开侧边栏

If the model at your screen looks different, then first go to the end of these instructions for different render modes. Sometimes you have to click in the screen again to show the model.

Click the small grey arrow to open the *Side-Bar*

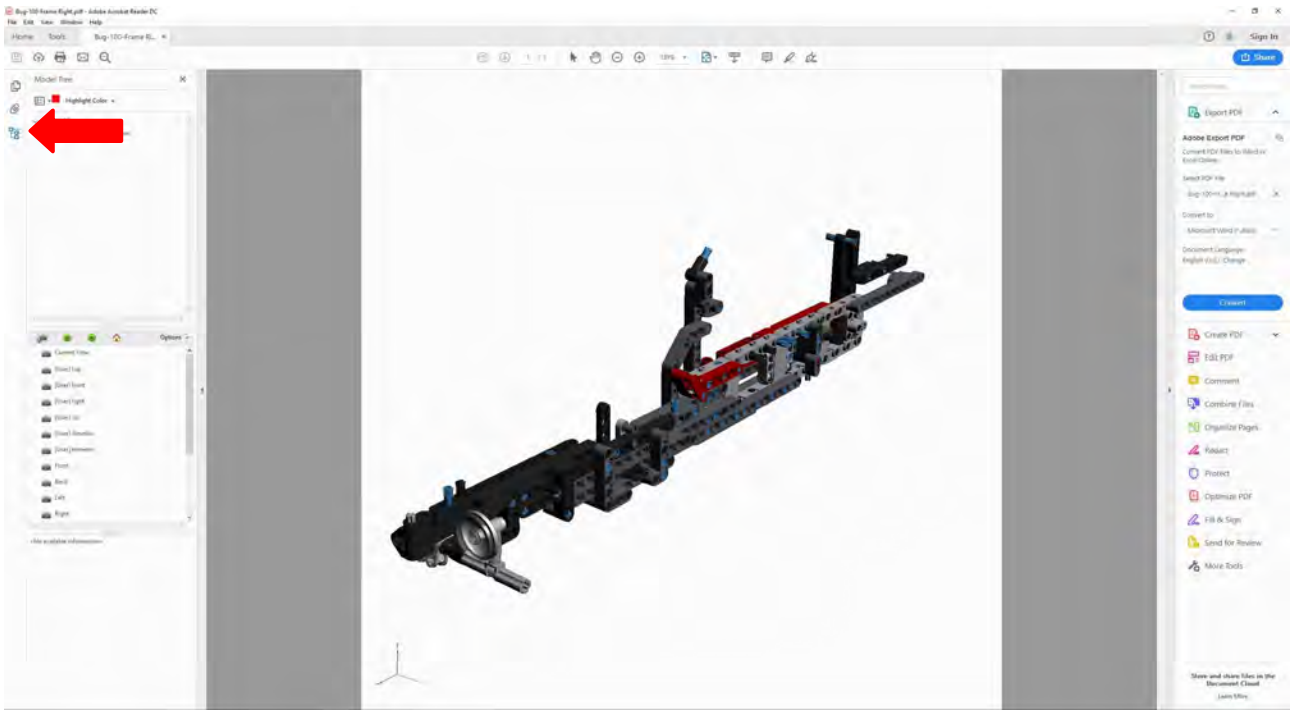

点击红色箭头处 打开模型树

Click here to open the Model Tree. The Model Tree shows a list of all parts and sub-assemblies in the building sequence.

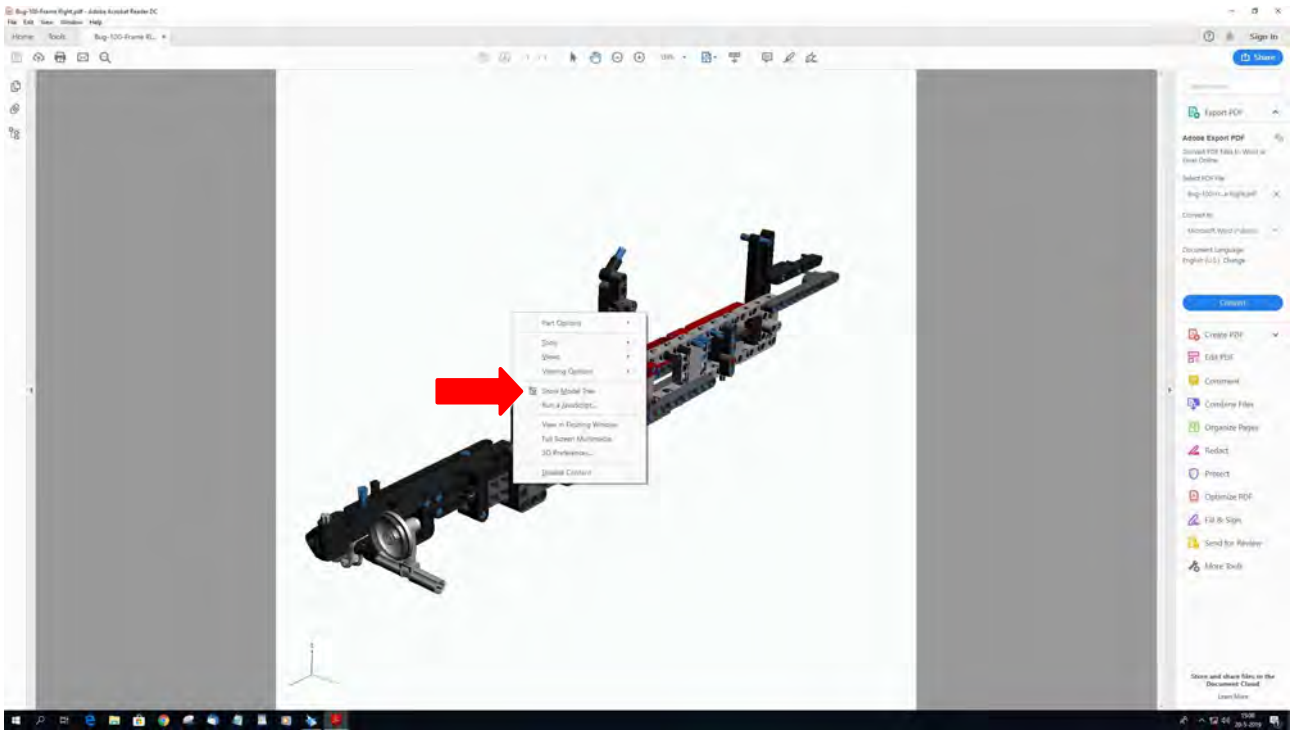

如果没有显示，右键单击空白处，在下拉菜单里选择：显示模型树

If the Model Tree does not show, then right-click somewhere in the screen and select *Show Model Tree*

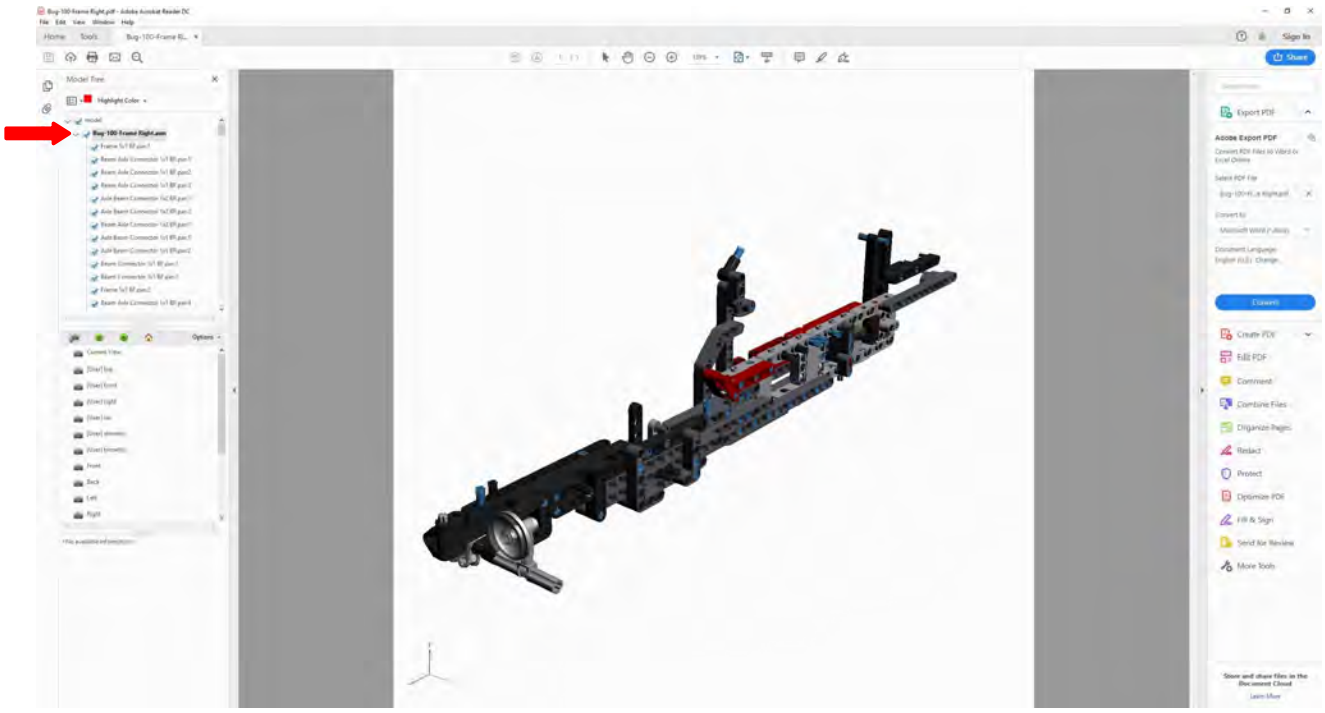

点击当前模型根目录前的蓝色勾，去掉勾选，隐藏所有零件。

Click the small grey pointer to show all the parts of this sub-assembly. Now click the small blue pointer in front of *Bug-100-Frame Right* text to hide everything.

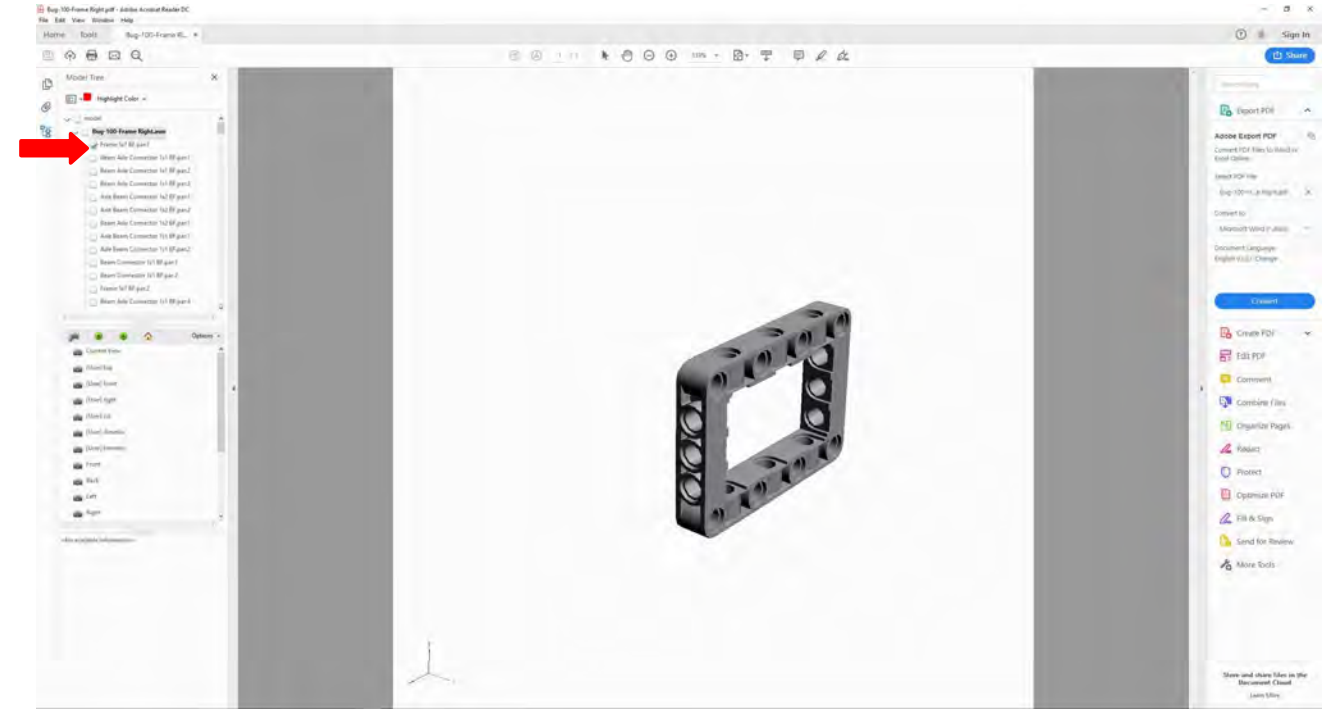

此时将子目录下的单个零件前打勾，勾选的零件就会显现 。模型步骤即随着勾选的增加向后进行。

Then click the box in front of the first part to show it again on the screen. Here it is also zoomed-in. By clicking the next boxes you can start building, because all the parts will show in the right sequence!

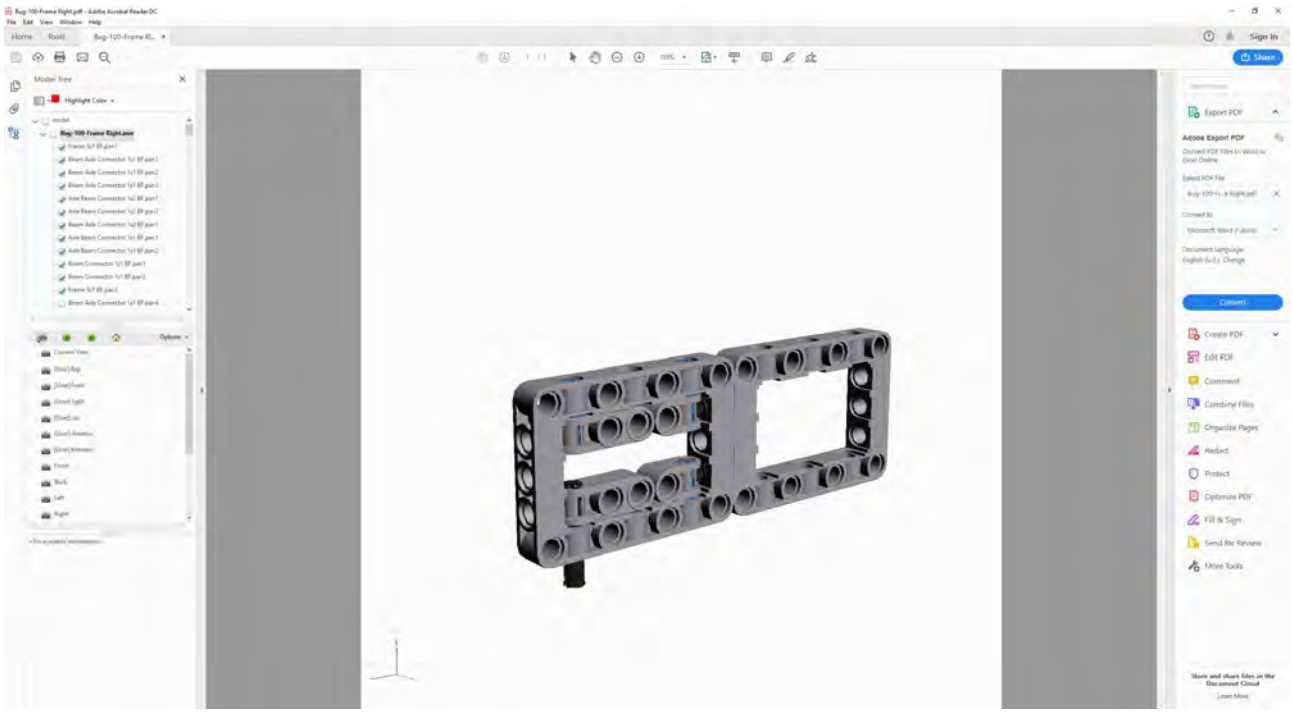

例如：现在子目录里的前12个零件都已被勾选，那么显示出来的也是拼好的前12个零件。

For example, here you see the first 12 parts assembled.
With the mouse keys and the control key you can zoom, rotate and move the model.

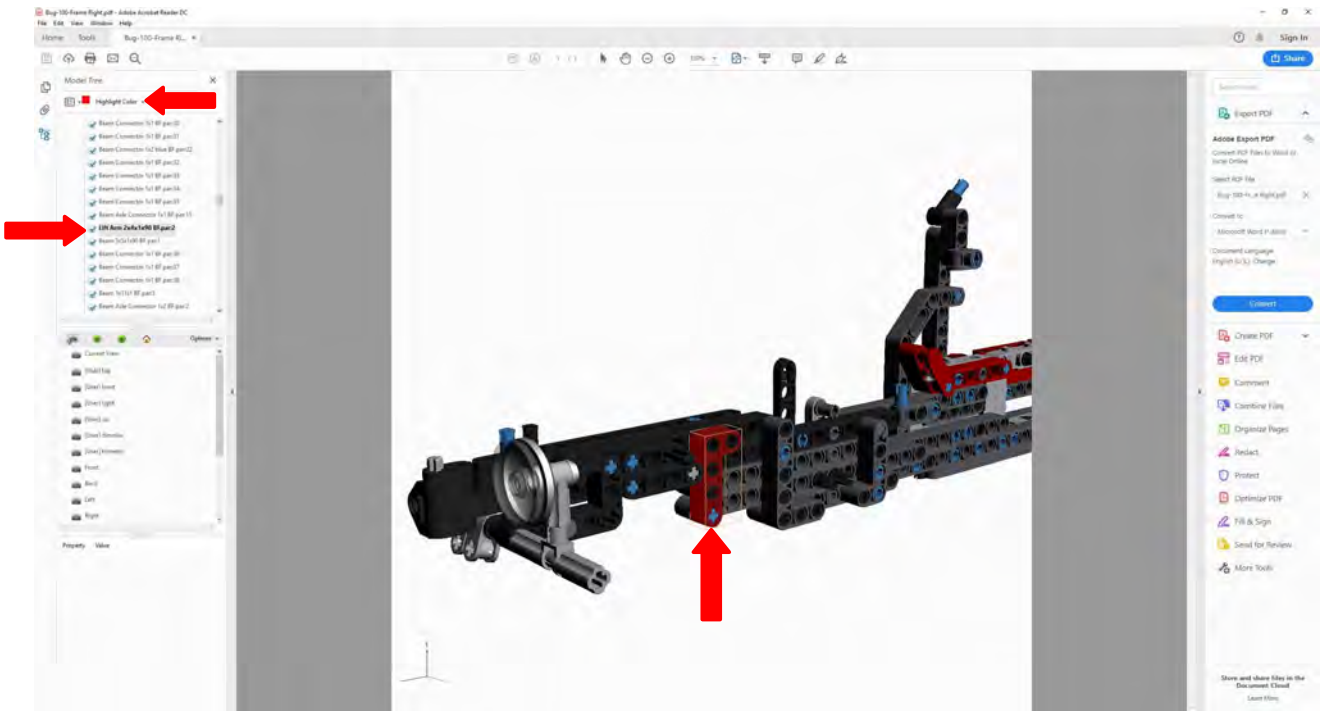

当需要看某个不容易看到的零件时，点击模型树里的零件条目，相应的零件就会高亮显示出来。

Sometimes it can be difficult to see where a certain part is, then click at the part in the Model Tree and it will highlight in the model. You can also change the *Highlight Color*.

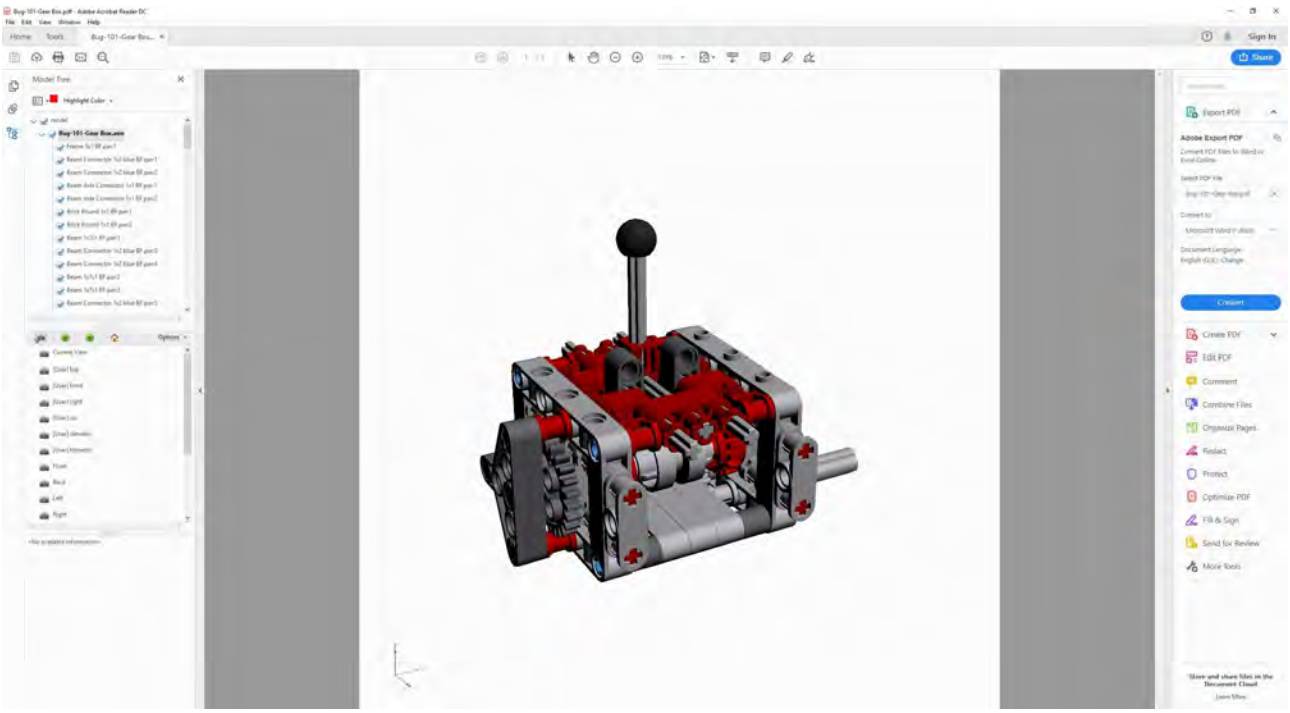

按同样的方法操作接下来的其他模型目录，就可以逐渐拼出全部的模型。
After finishing the first assembly you can start with the next, Bug-101-Gear Box, and so on.

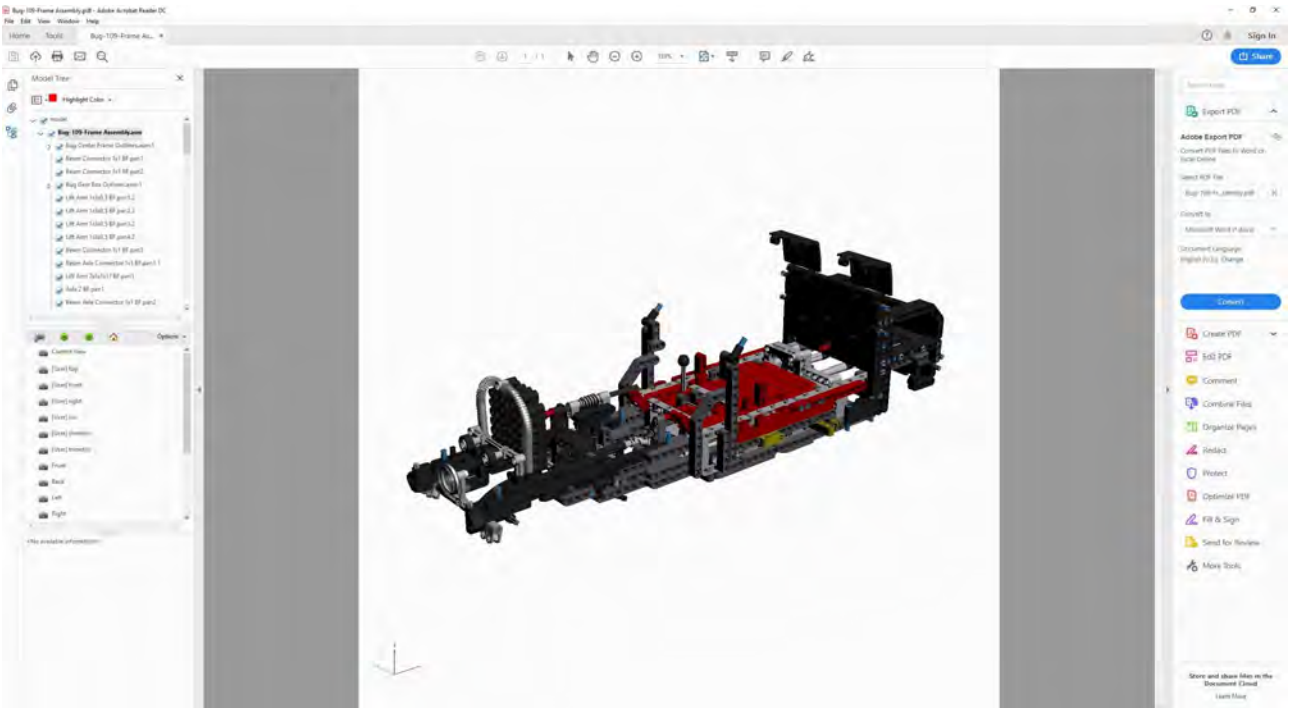

Here you see sub-assemblies and parts together in the Bug-109-Frame Assembly. The sub-assemblies you have build before, so you don’t have to see their parts now. To prevent the computer from getting slow, there are a great number of parts removed from the sub-assemblies before placing them here.

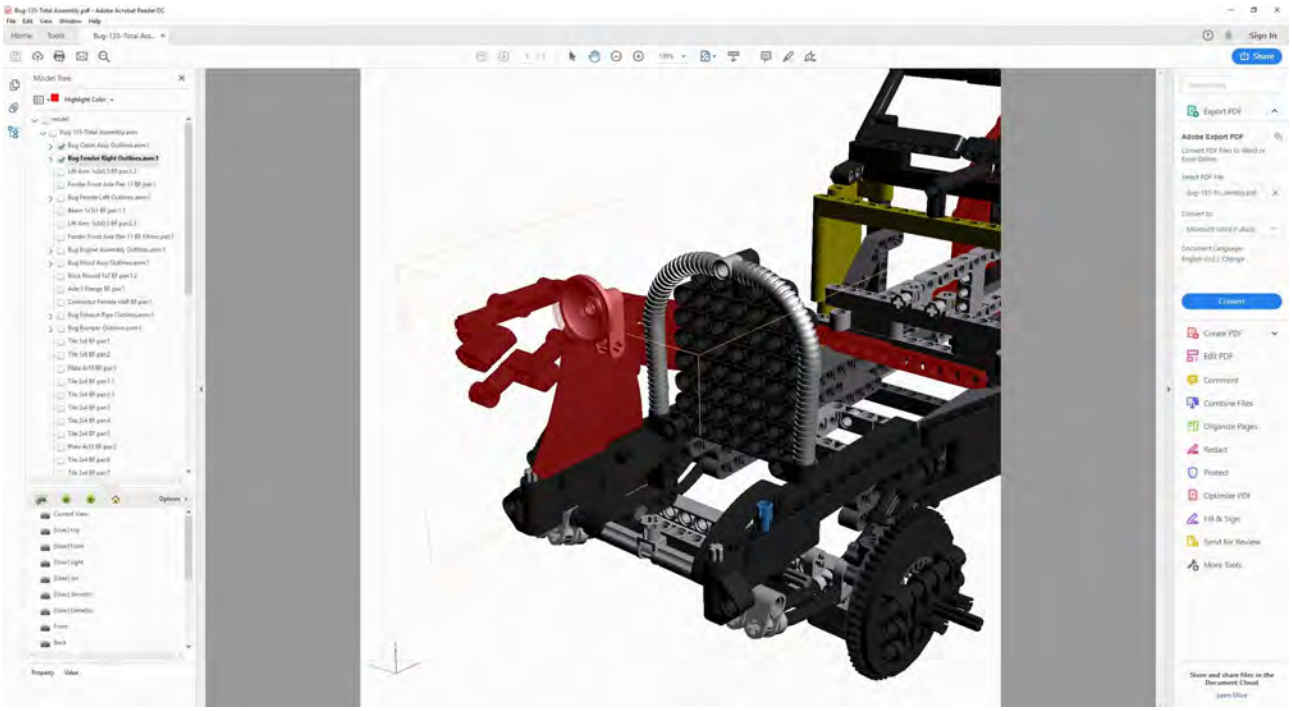

Removing parts from the sub-assemblies makes it also more clear how to place the next parts: here you see the placement of the Right Fender for example.

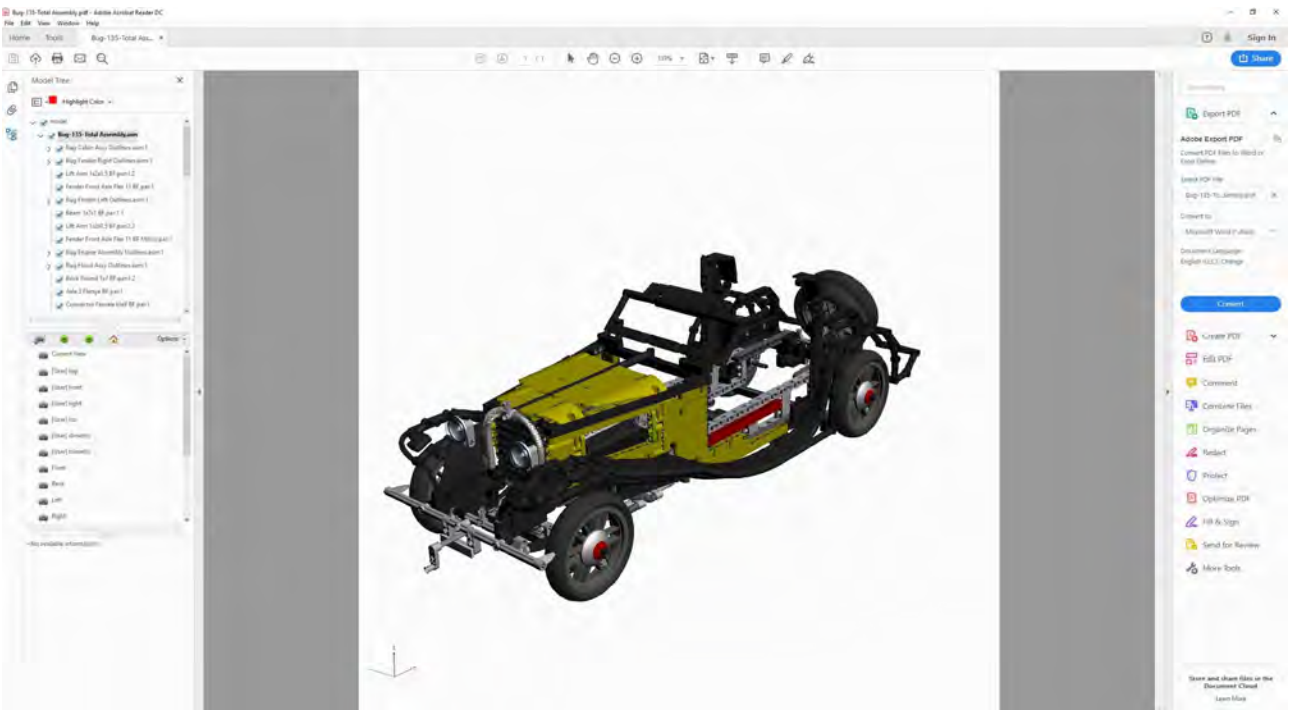

当拼完时，你会在电脑上看到这个样子，然而你面前的实物已经可以看到下图这样了：

This is the finished model at the screen, but at your working table it looks like the next picture:

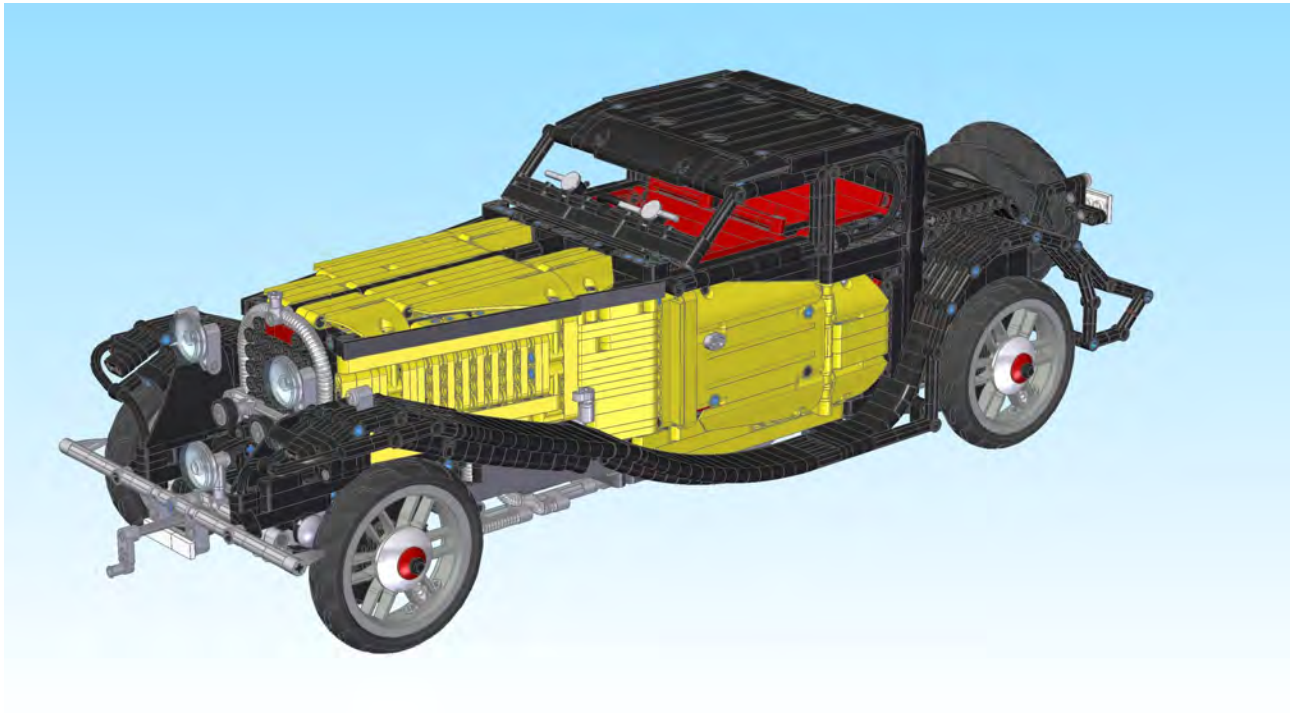

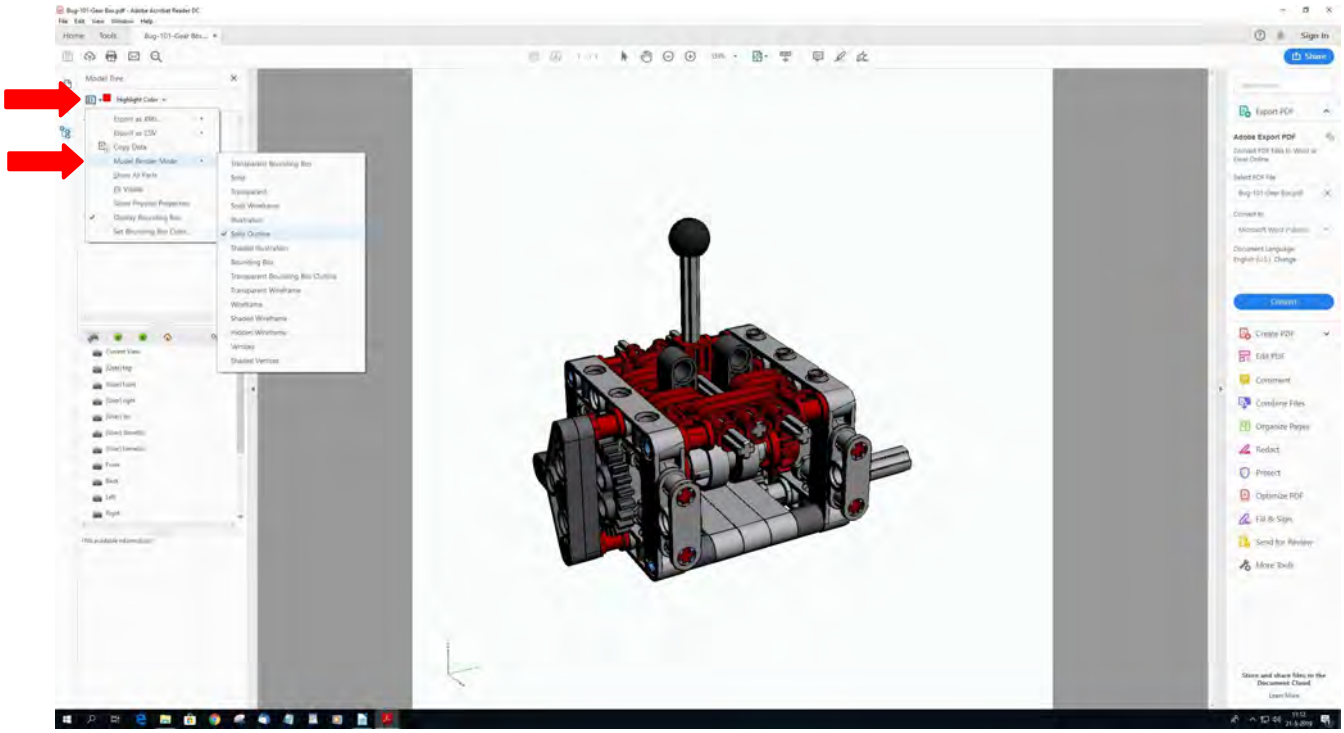

If your model appears different on the screen, you can change that by first clicking the symbol at the left top in the Model Tree window and then choose Model Render Mode. In the next window you do have a choice of renderings. Here you see the Solid Outline view.

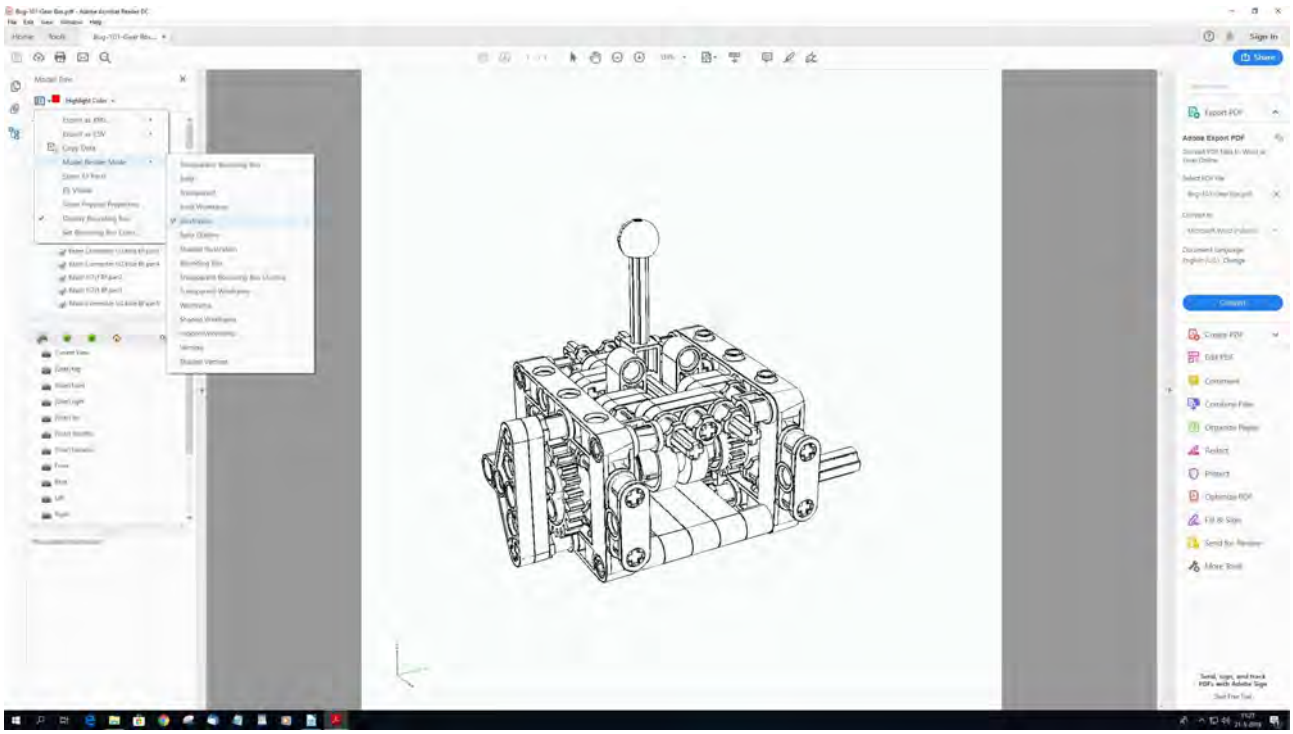

Here you see the Illustration view for example.