SCANIA R500

1657 pcs

Remote controlled Scania R500 model

1

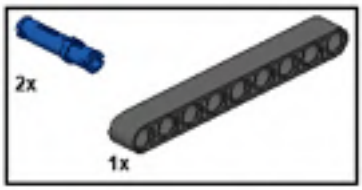

2

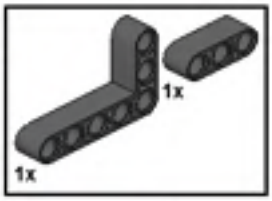

3

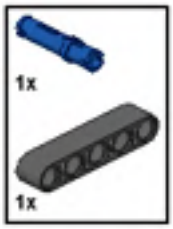

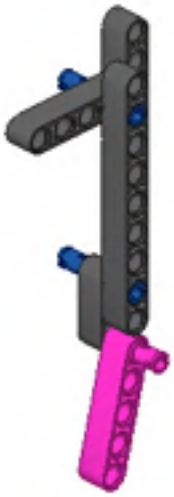

4

5

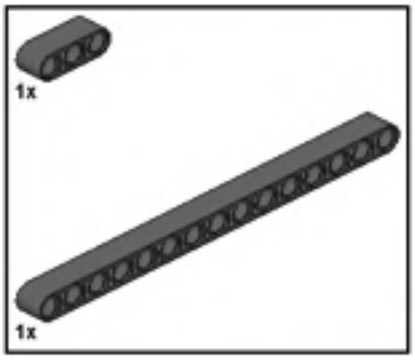

6

7

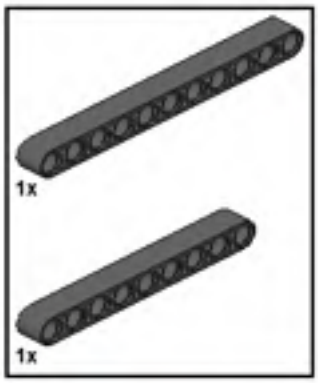

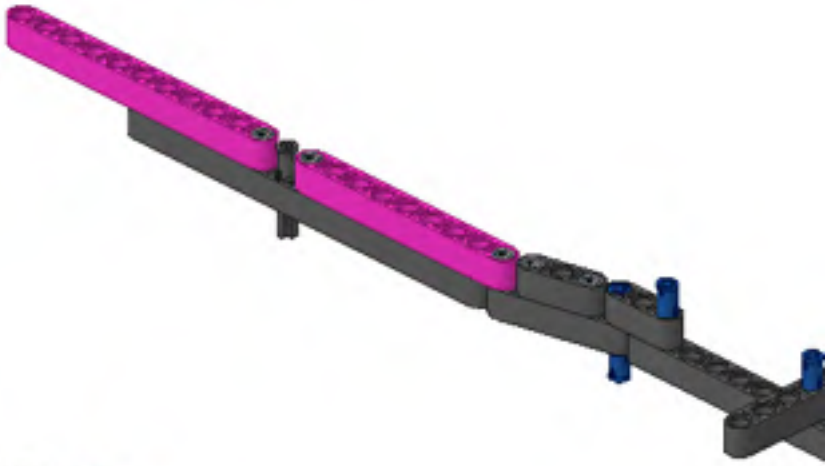

8

9

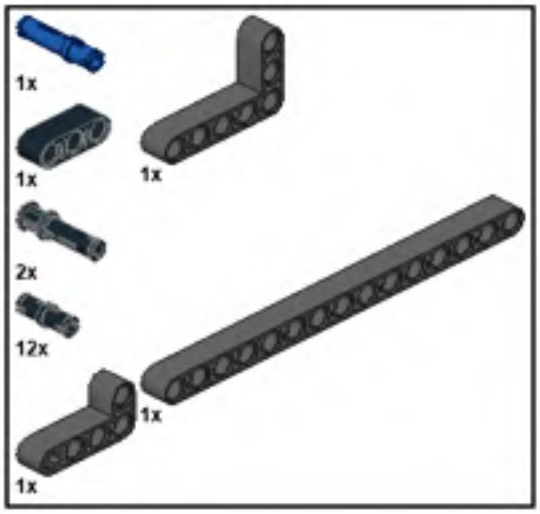

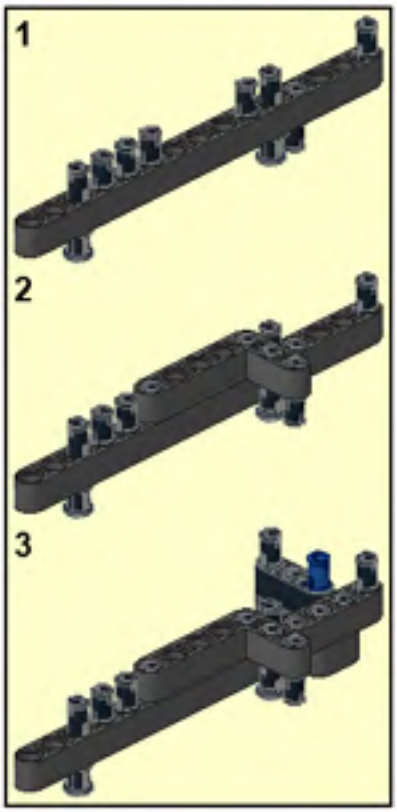

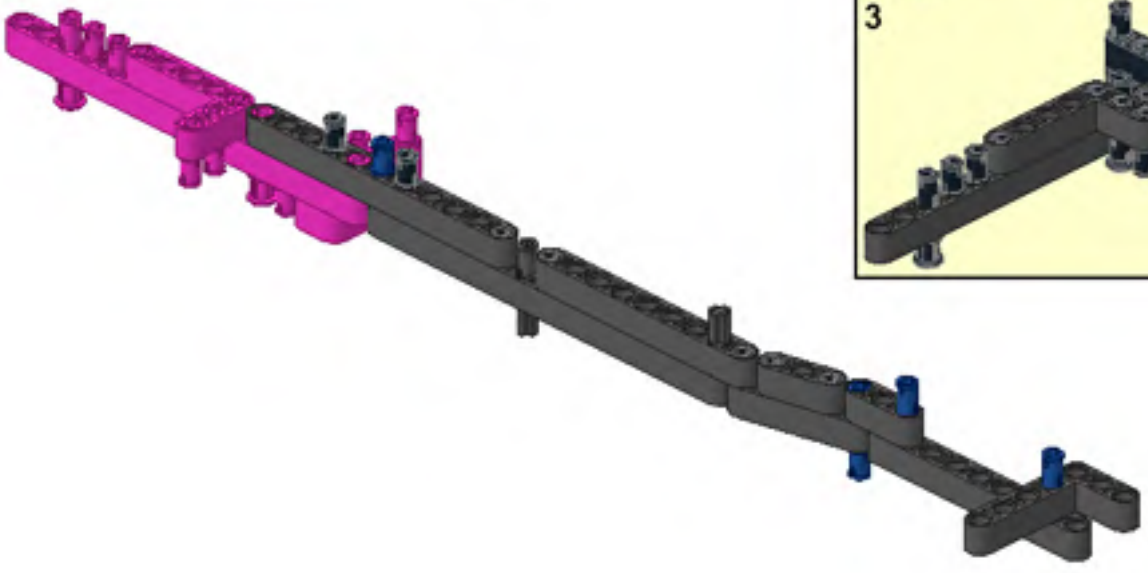

10

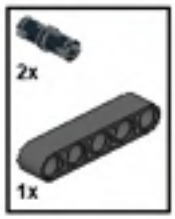

11

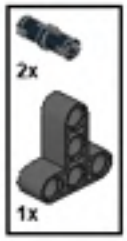

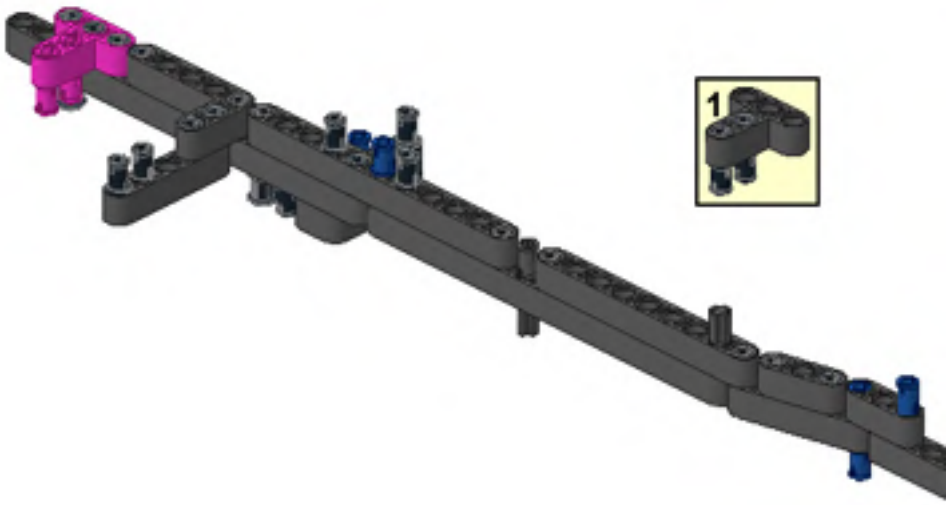

12

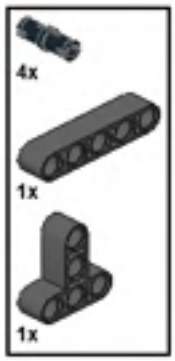

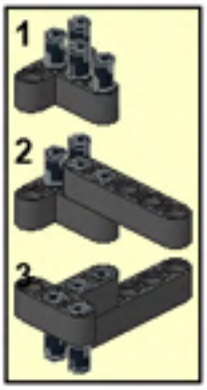

1

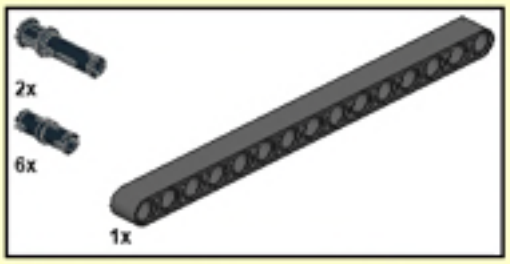

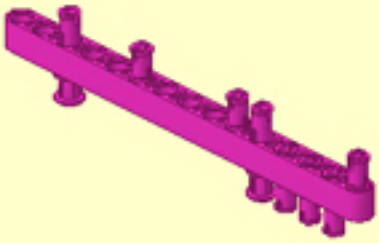

2

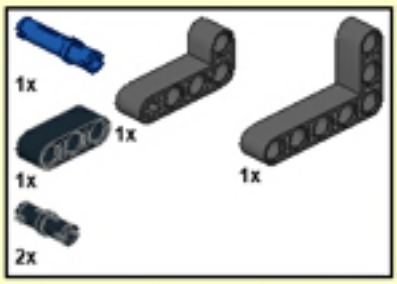

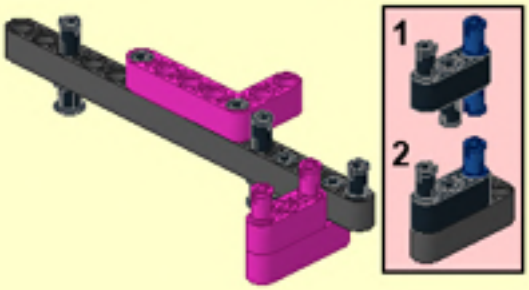

13

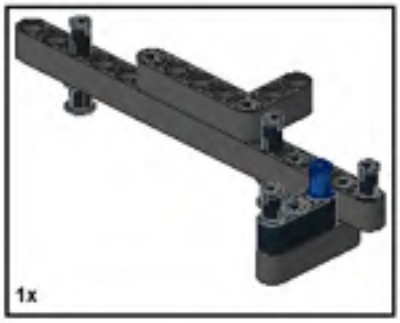

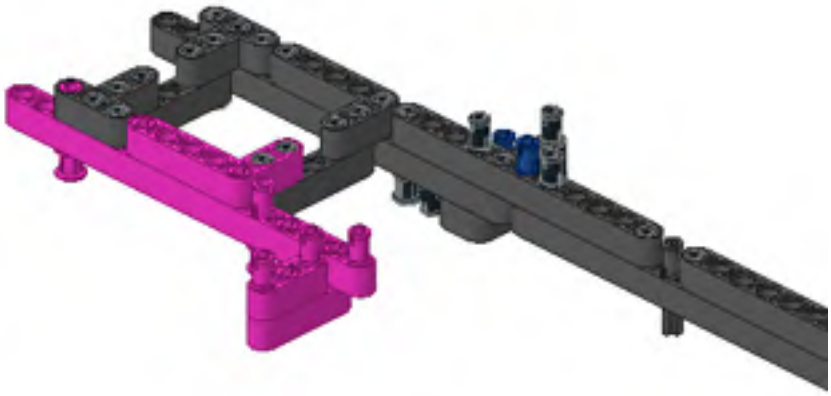

14

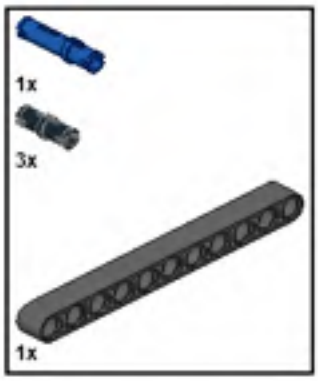

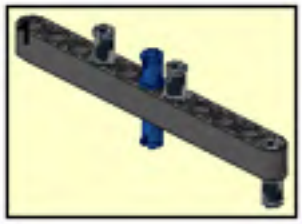

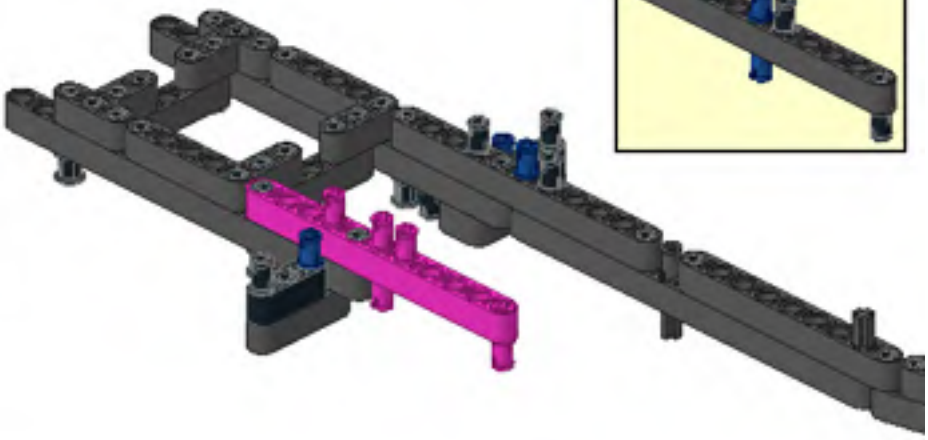

15

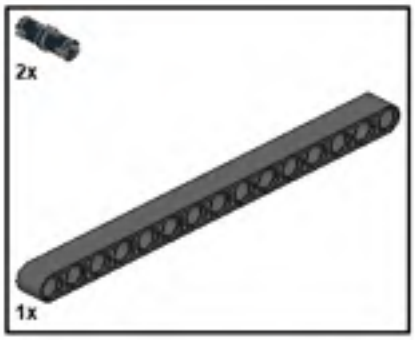

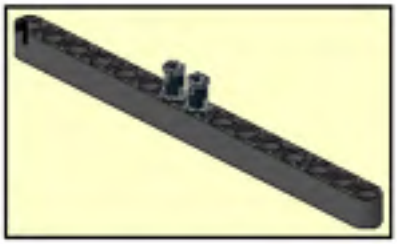

16

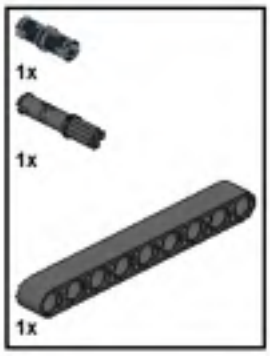

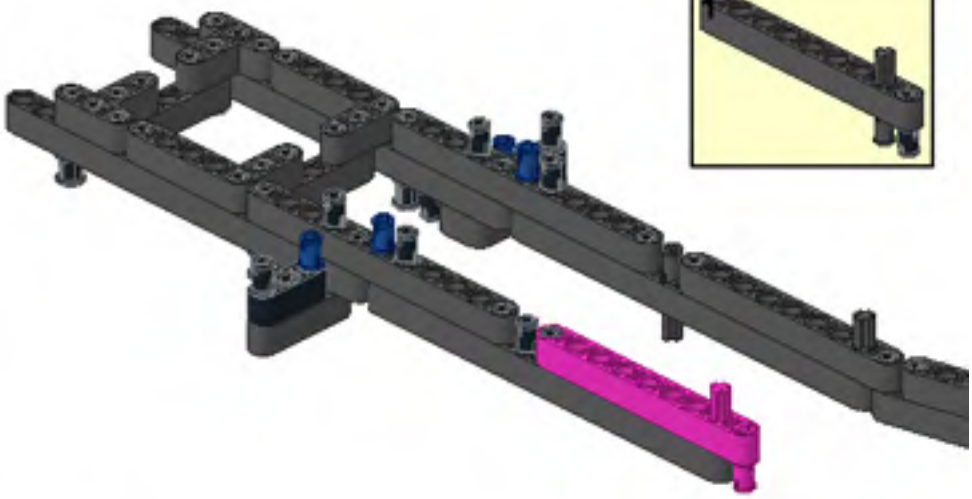

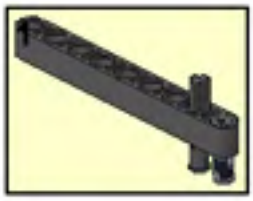

17

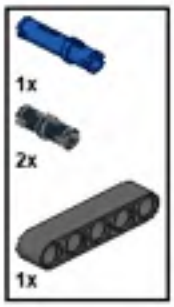

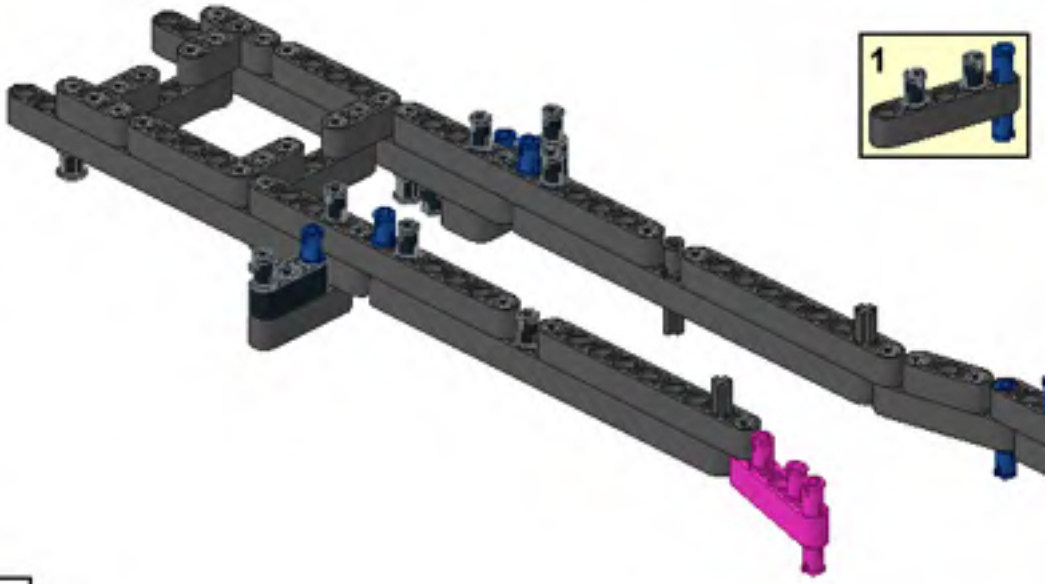

18

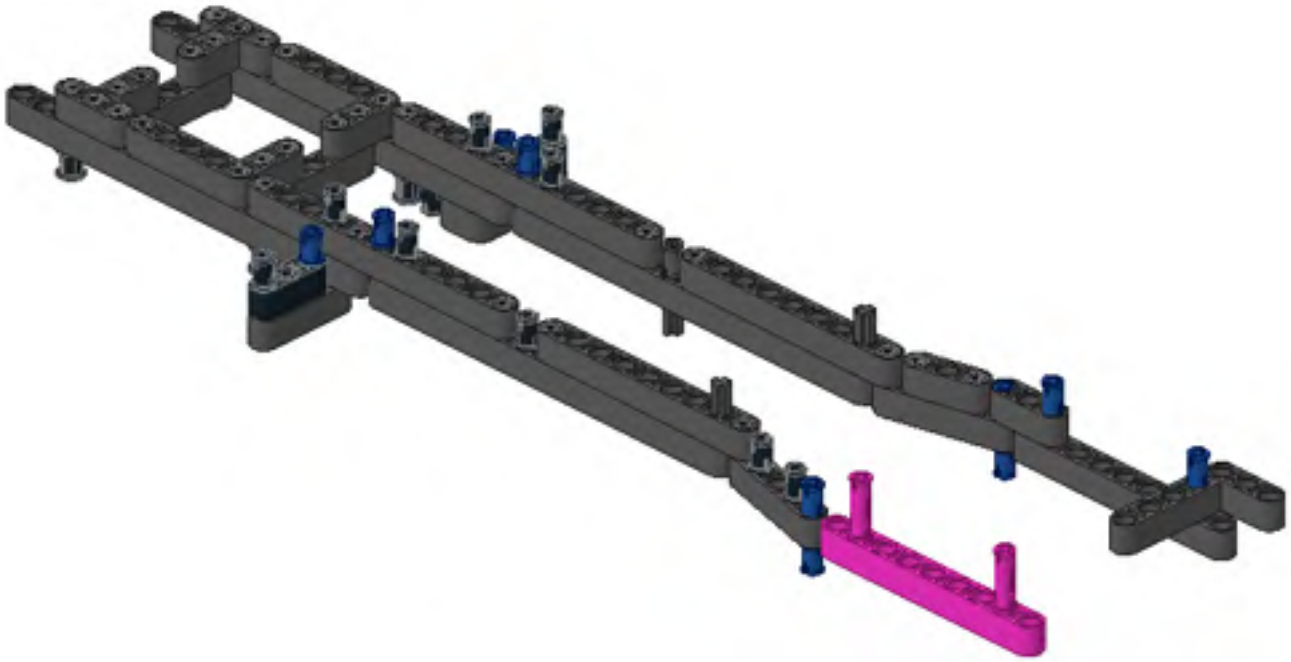

19

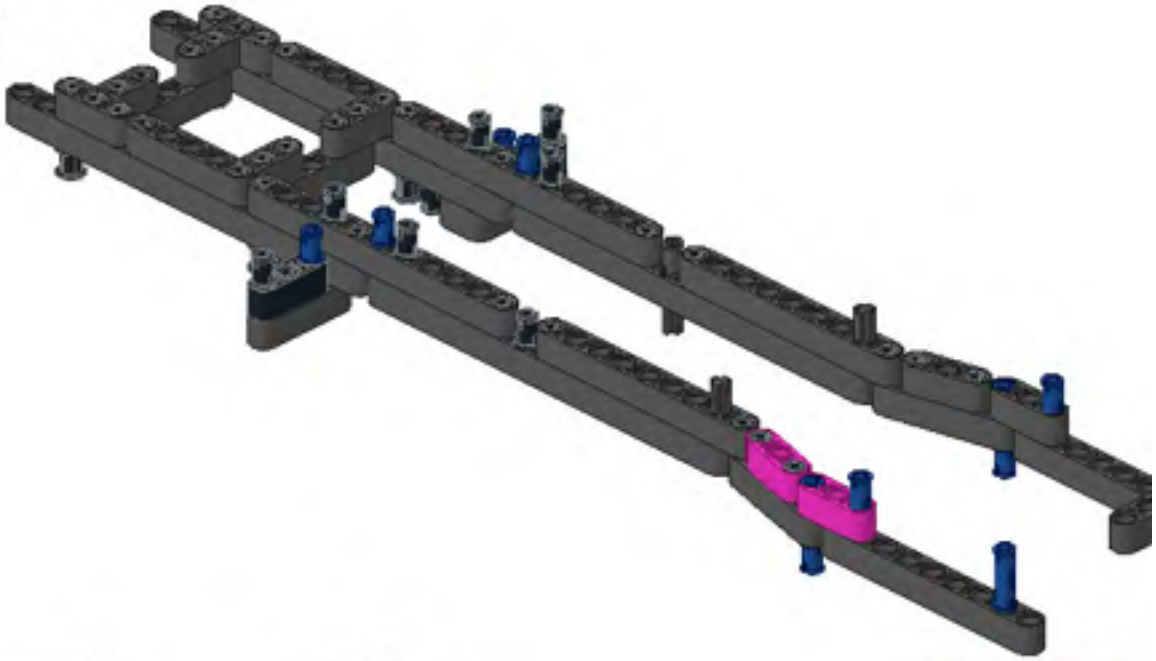

20

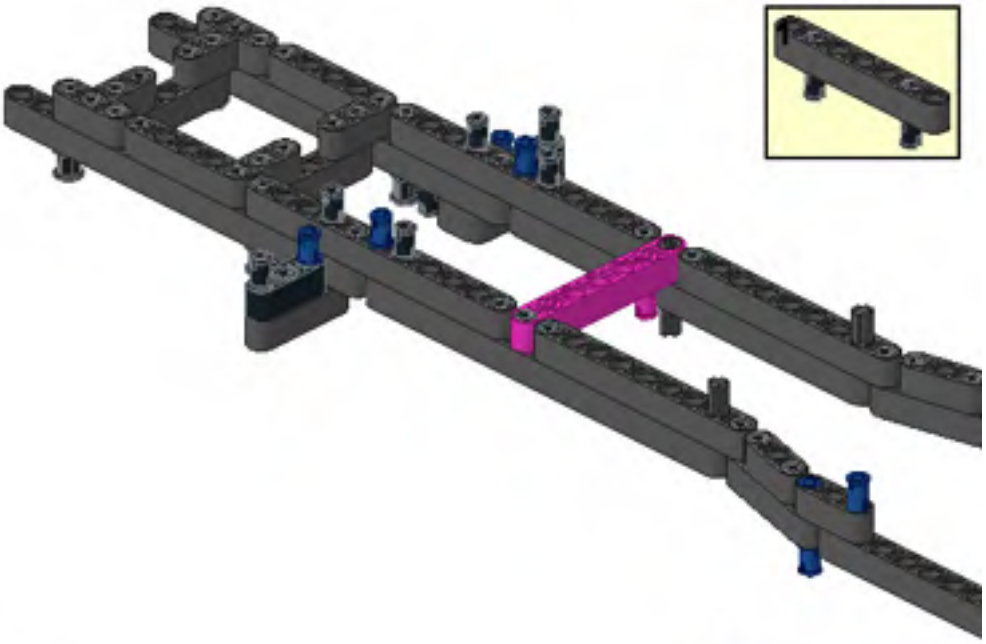

21

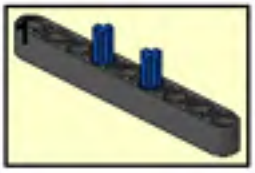

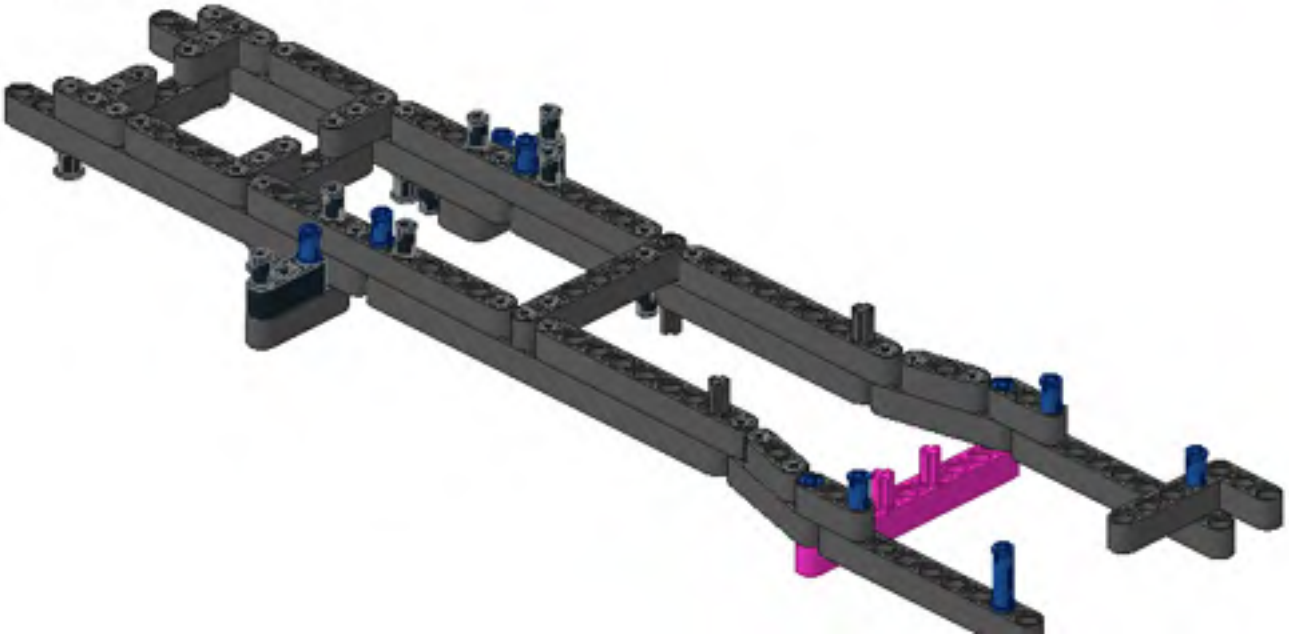

1

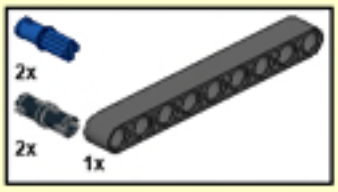

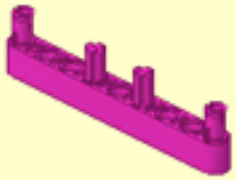

22

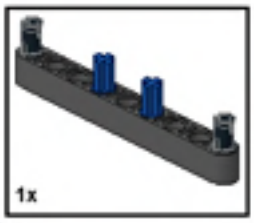

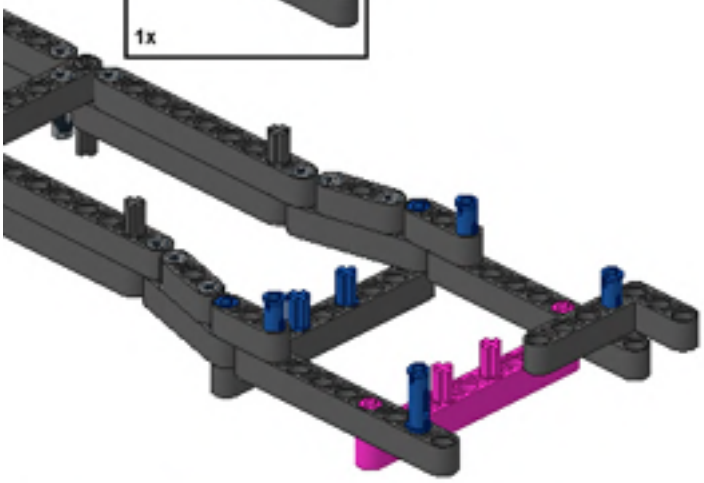

23

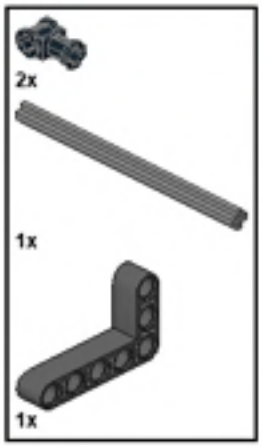

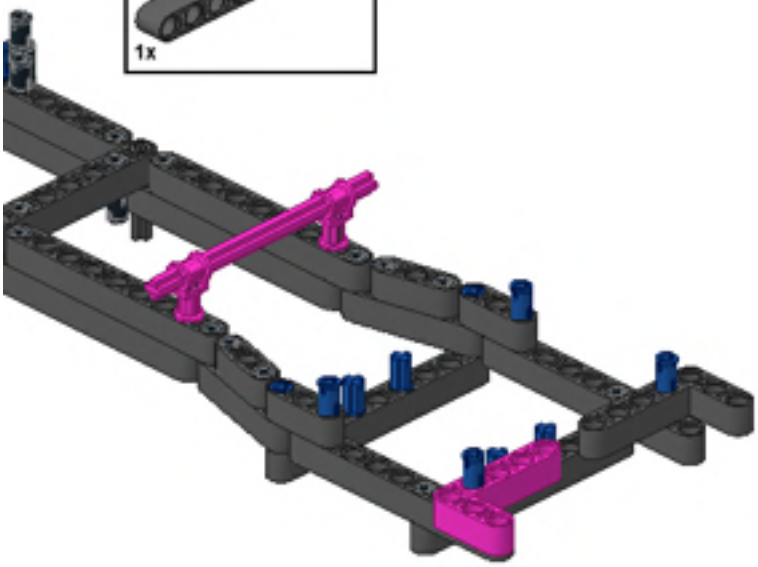

1

2

3

4

5

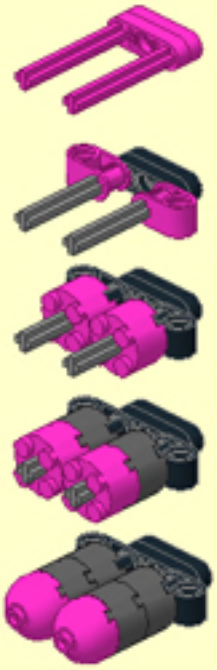

24

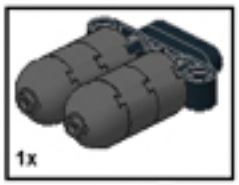

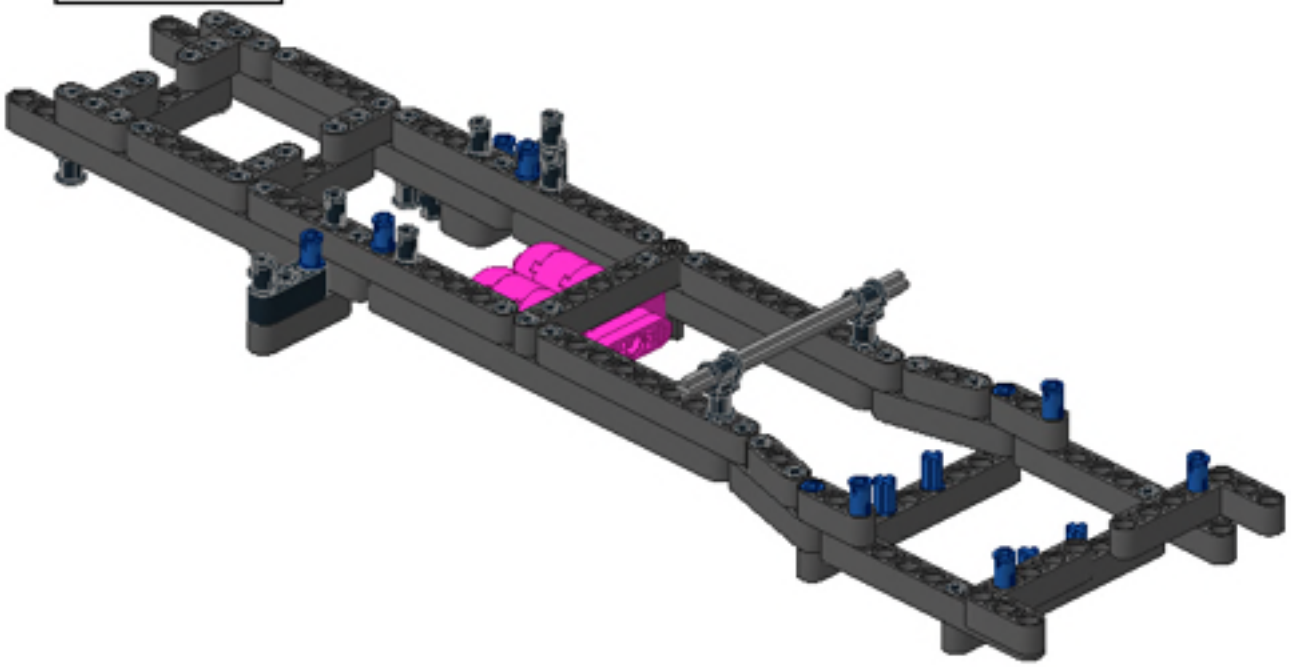

1

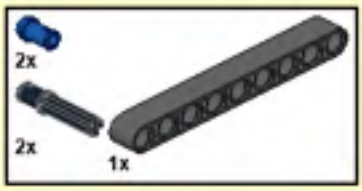

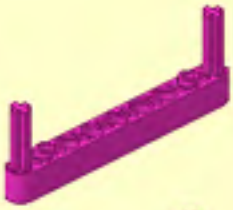

2

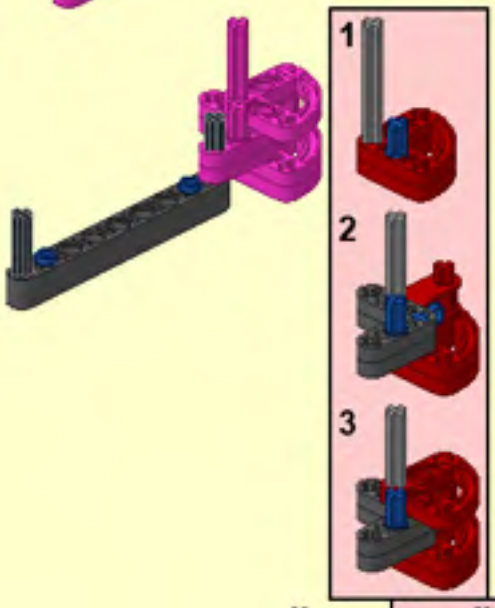

3

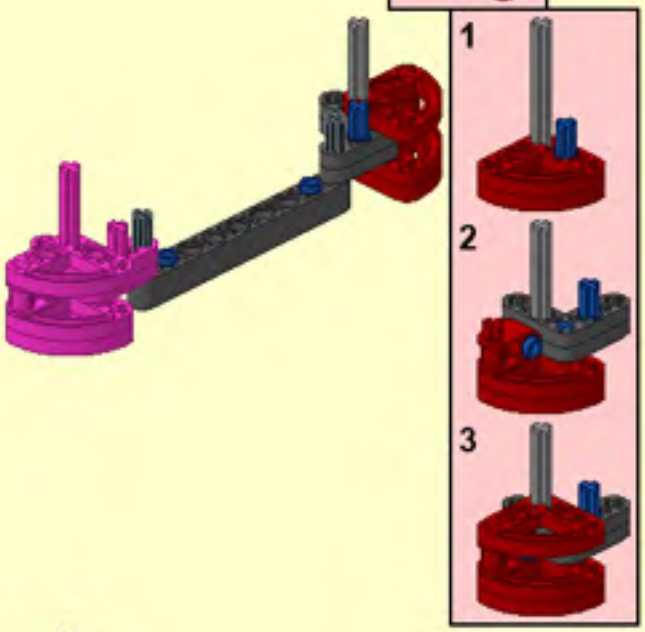

4

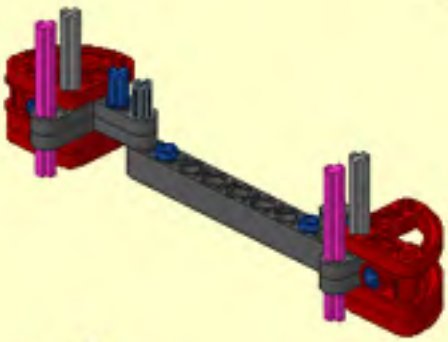

5

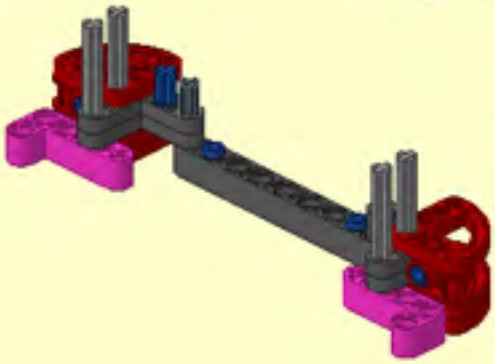

6

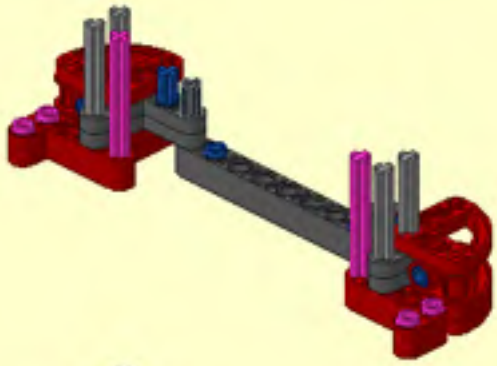

7

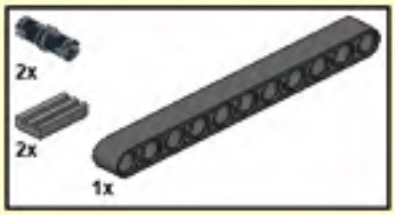

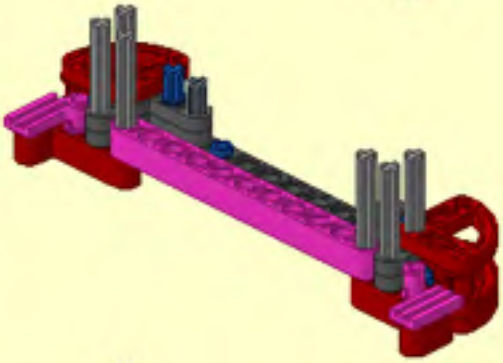

8

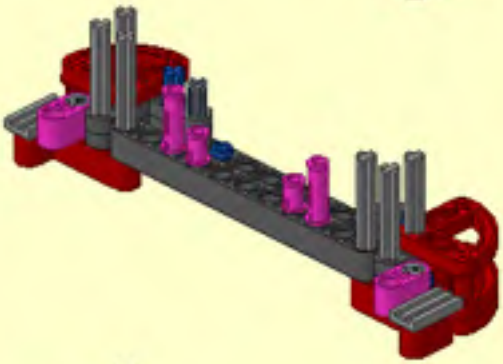

9

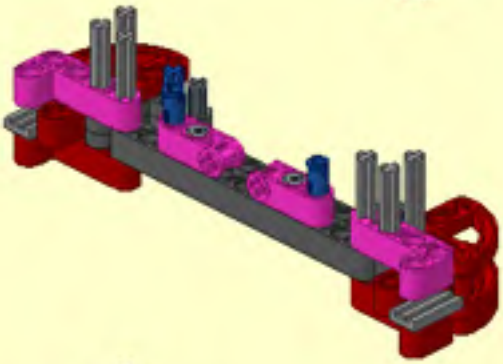

10

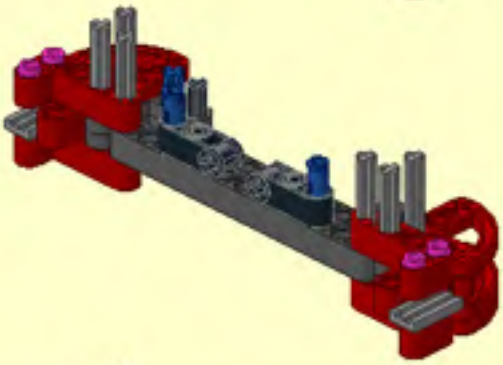

11

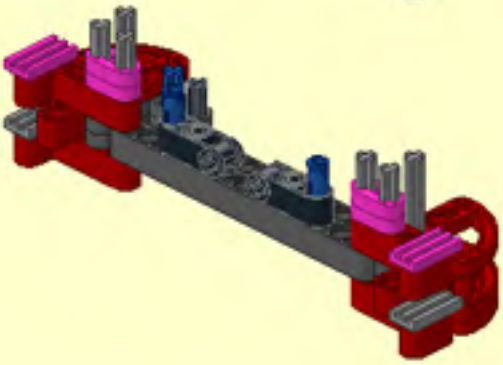

12

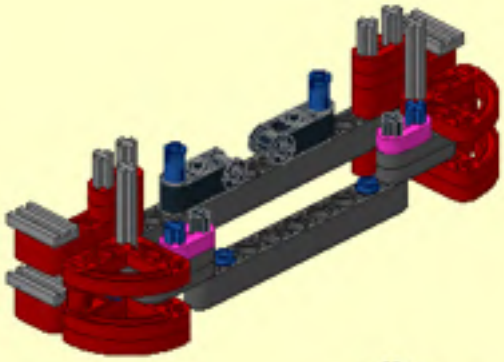

13

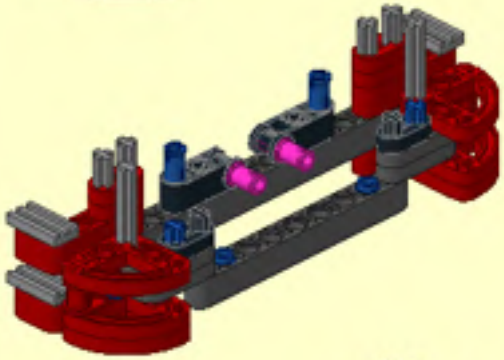

14

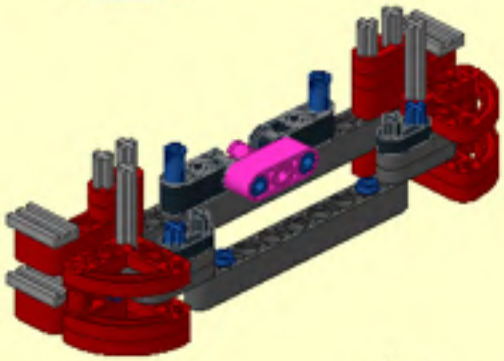

15

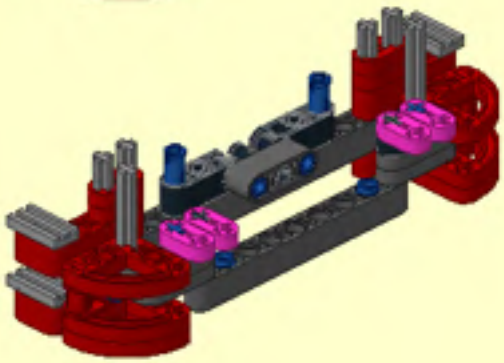

1

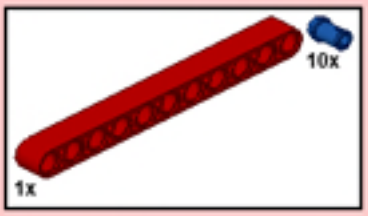

2

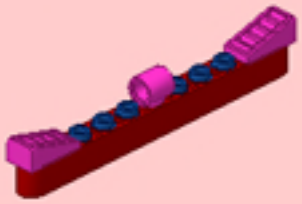

16

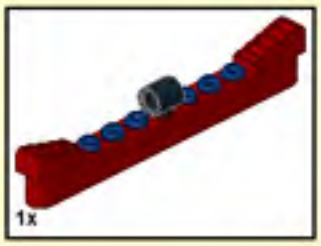

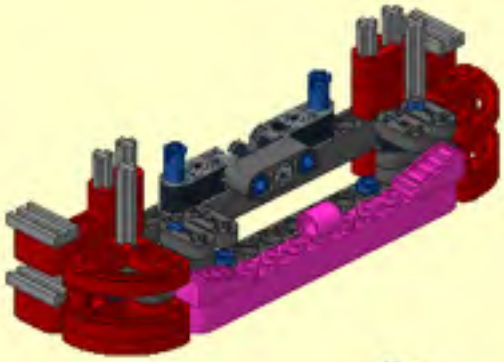

17

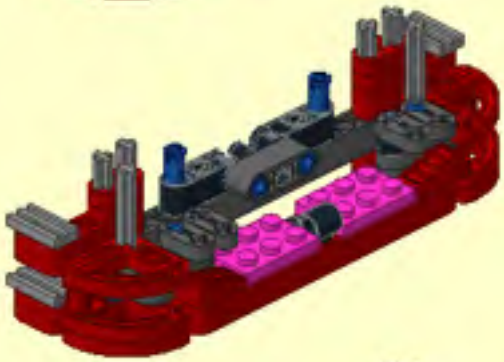

18

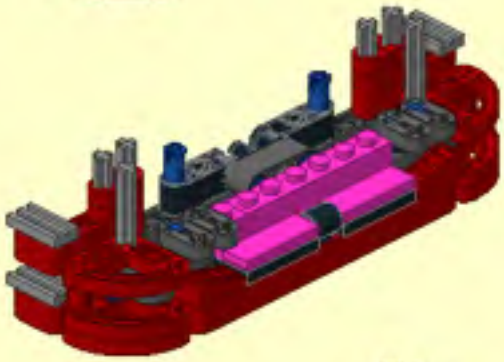

19

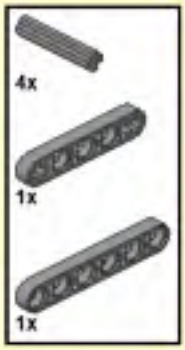

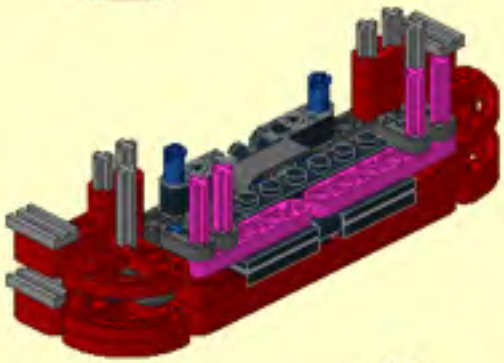

20

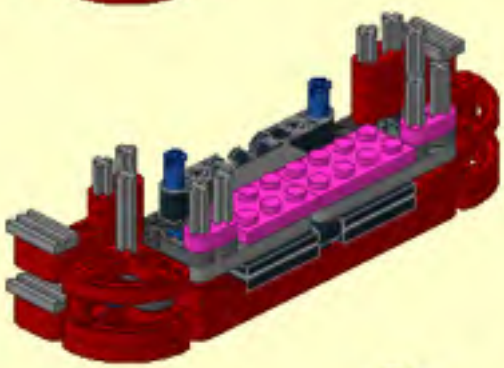

21

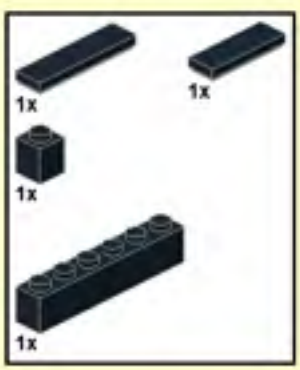

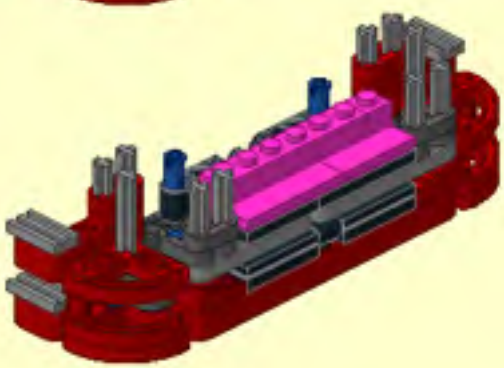

22

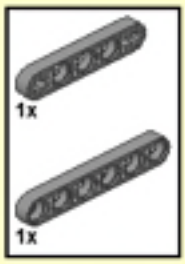

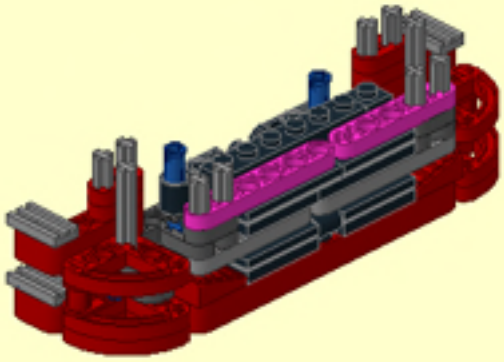

1

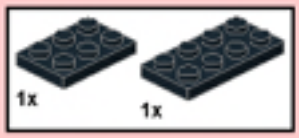

2

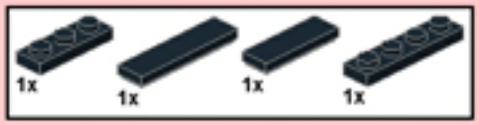

23

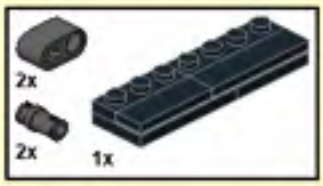

24

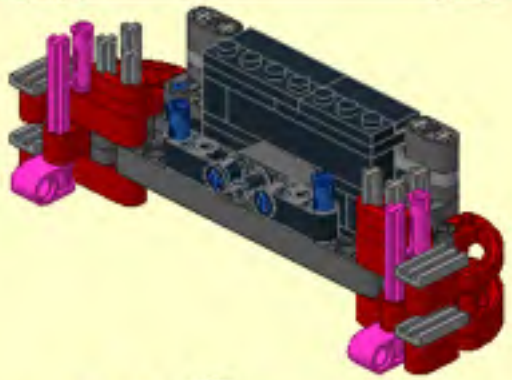

25

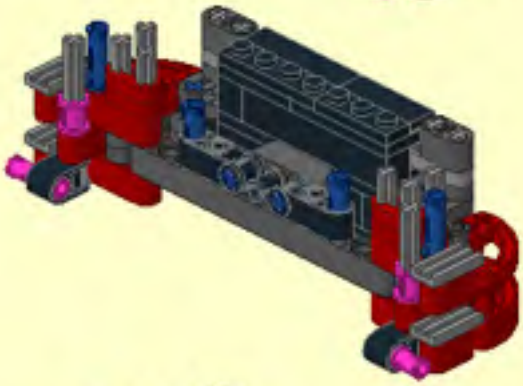

26

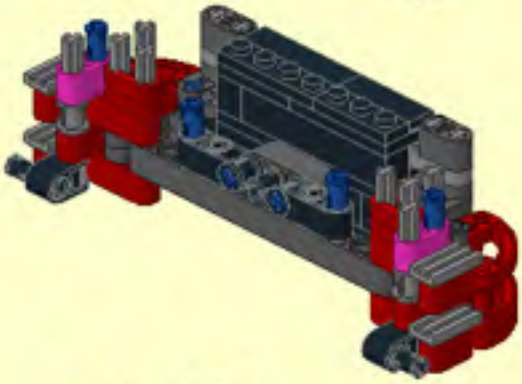

27

← **Black**

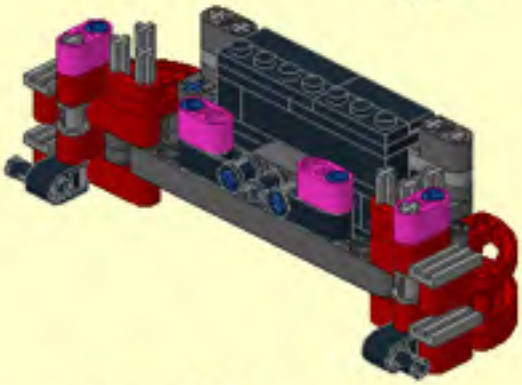

28

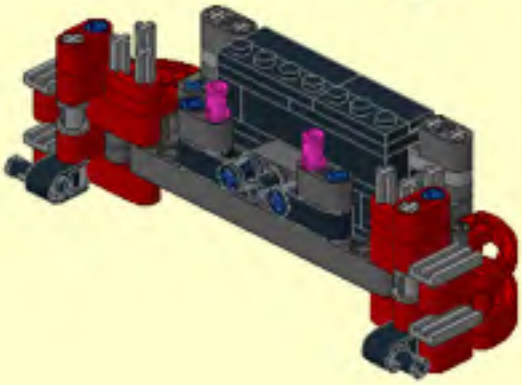

25

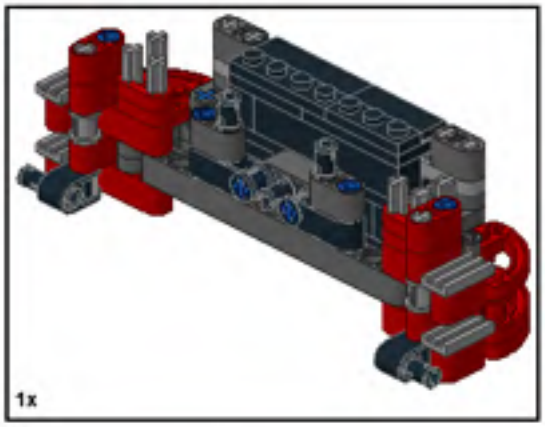

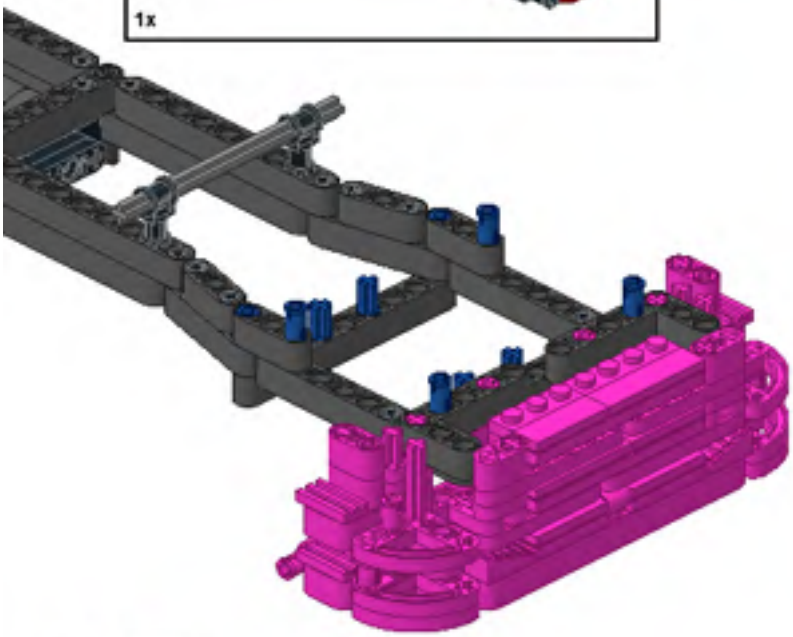

26

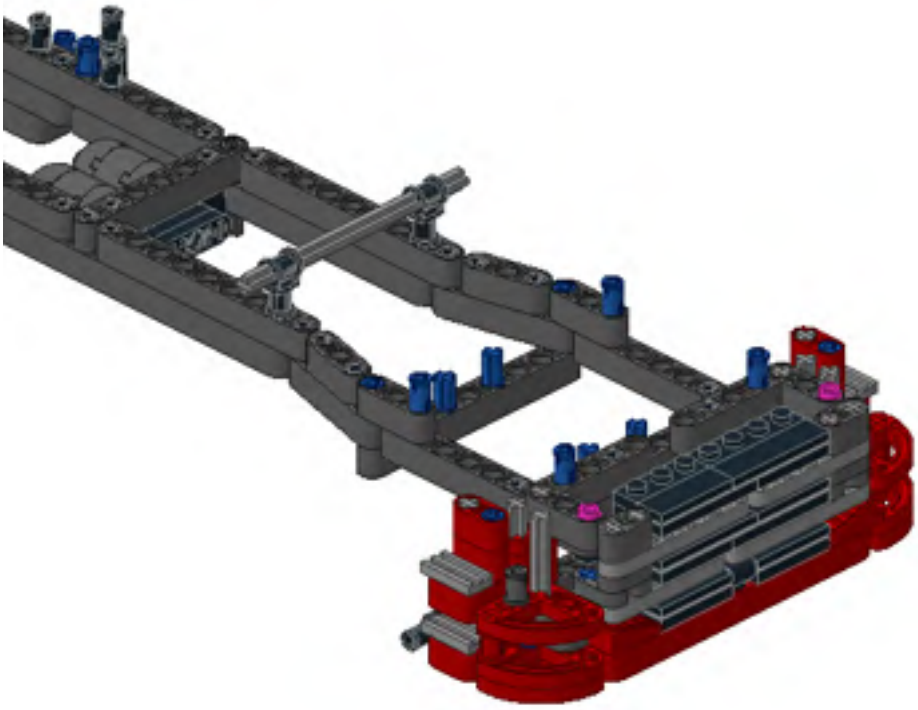

27

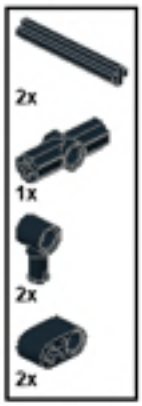

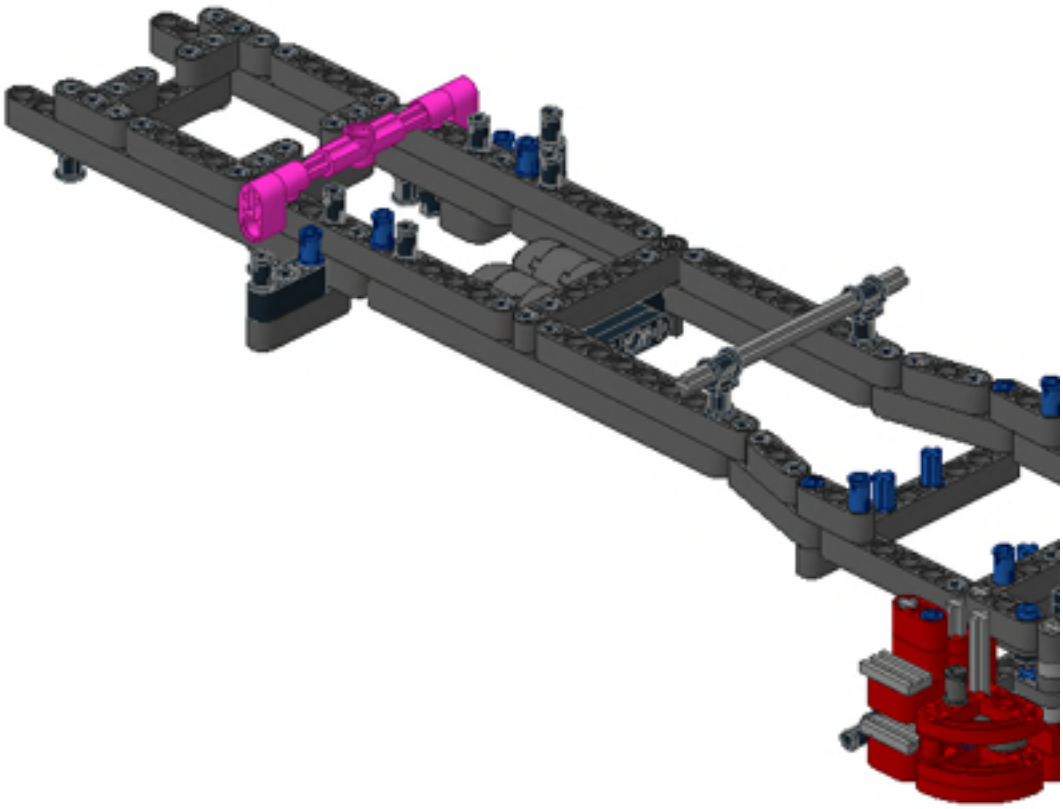

1

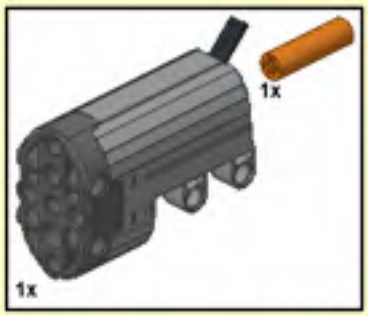

2

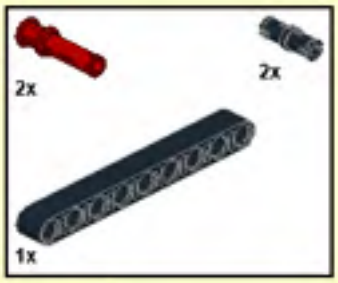

3

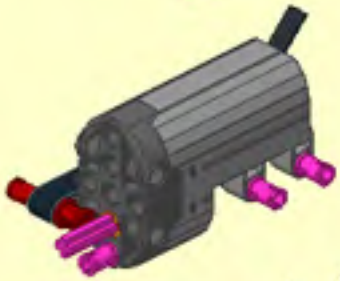

4

5

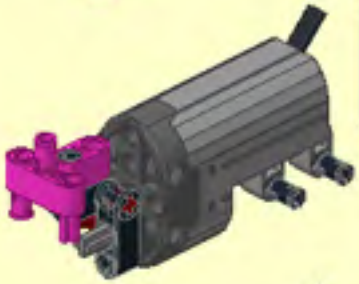

6

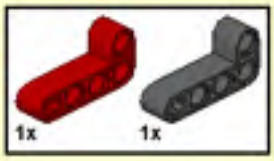

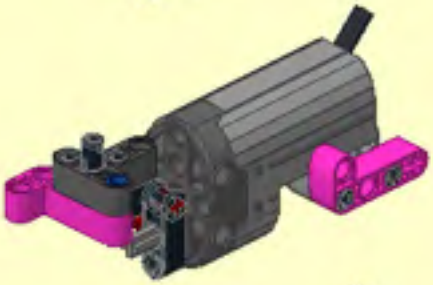

7

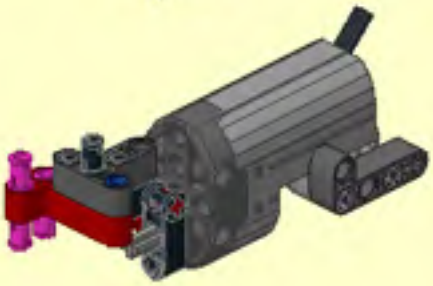

1

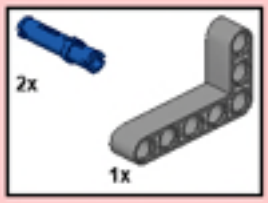

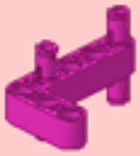

2

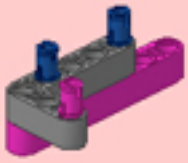

8

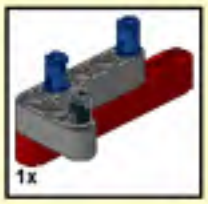

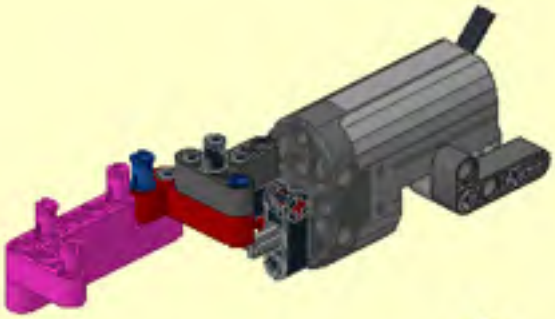

9

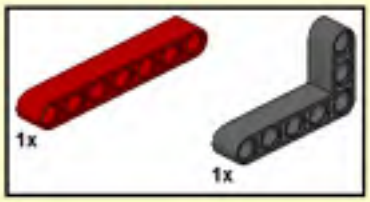

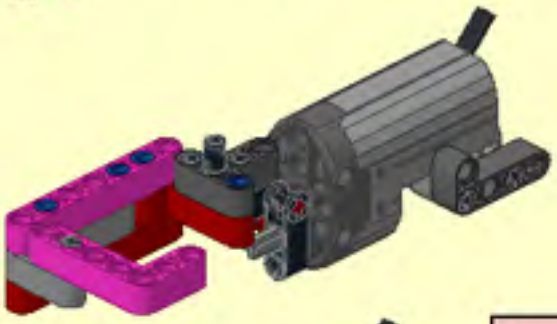

10

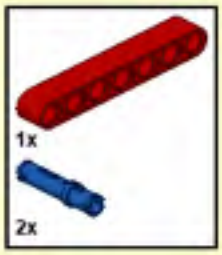

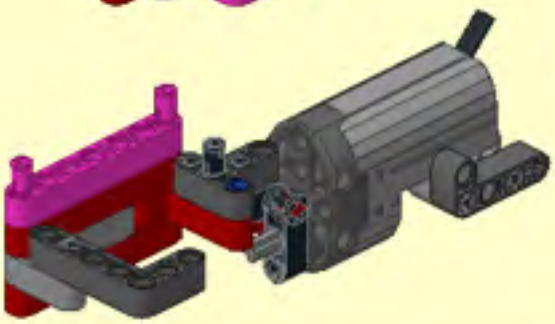

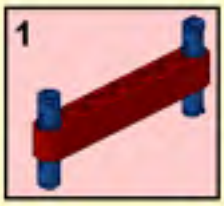

11

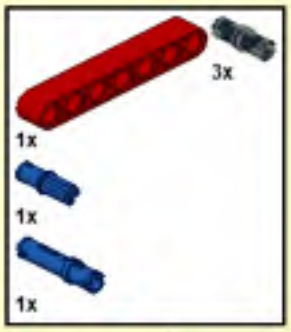

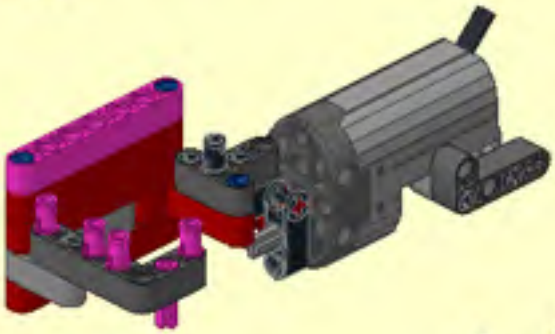

12

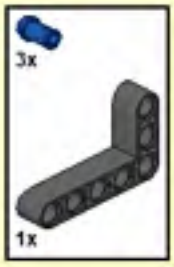

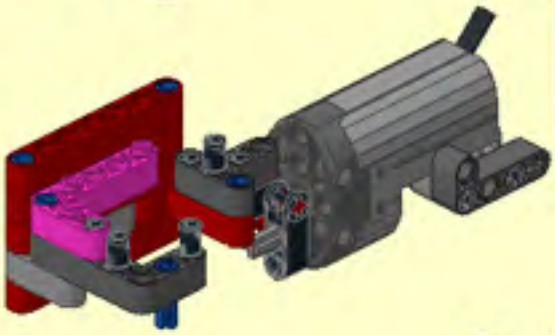

13

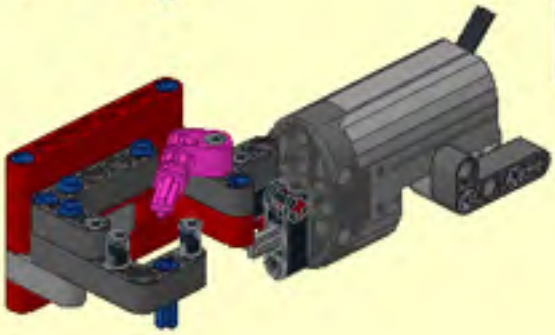

14

1x
1x
1x
1x
1x
2x

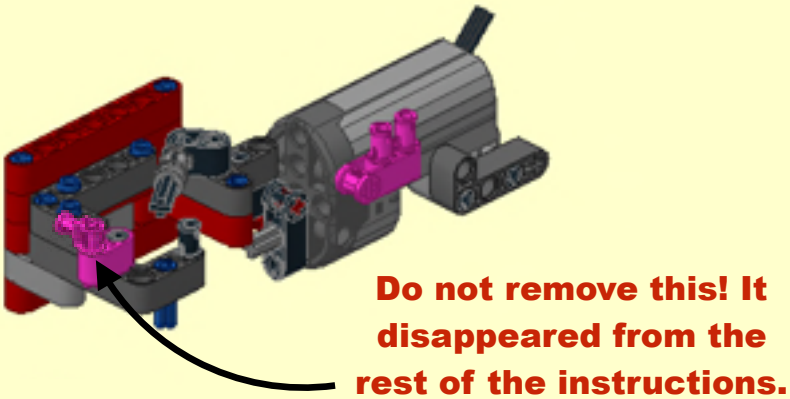
Do not remove this! It disappeared from the rest of the instructions.

1

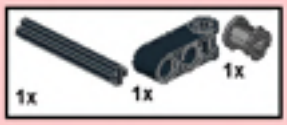

2

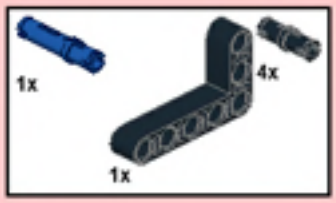

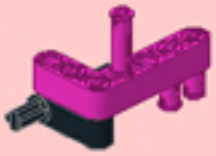

3

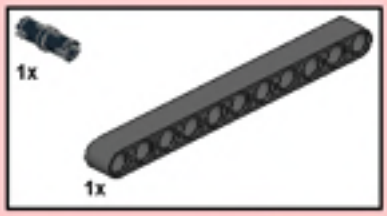

4

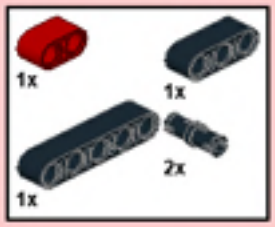

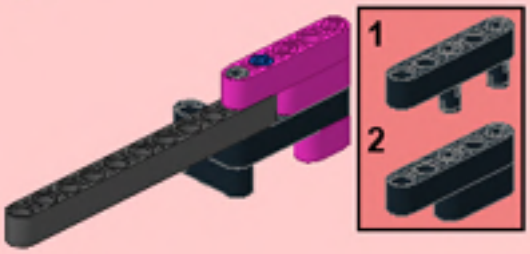

15

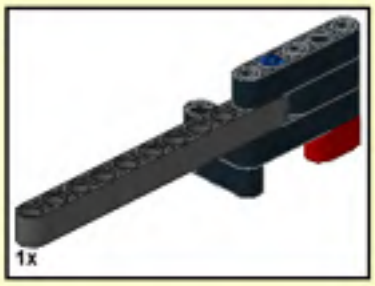

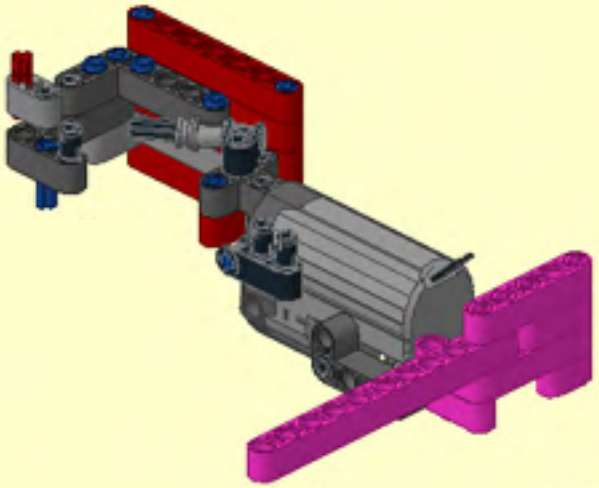

16

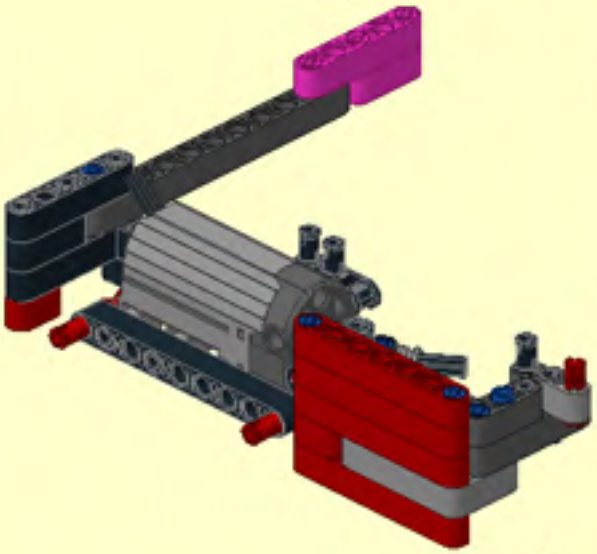

17

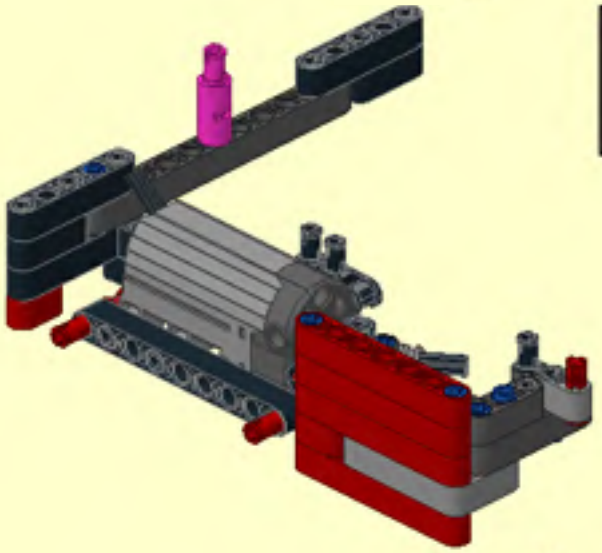

28

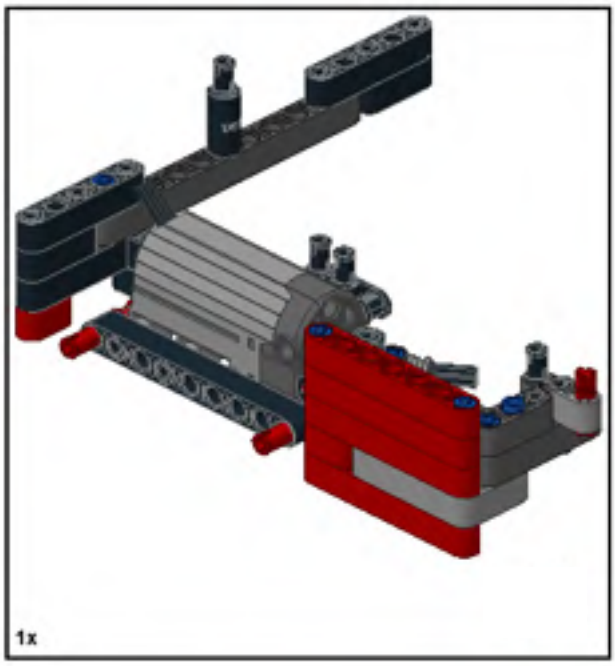

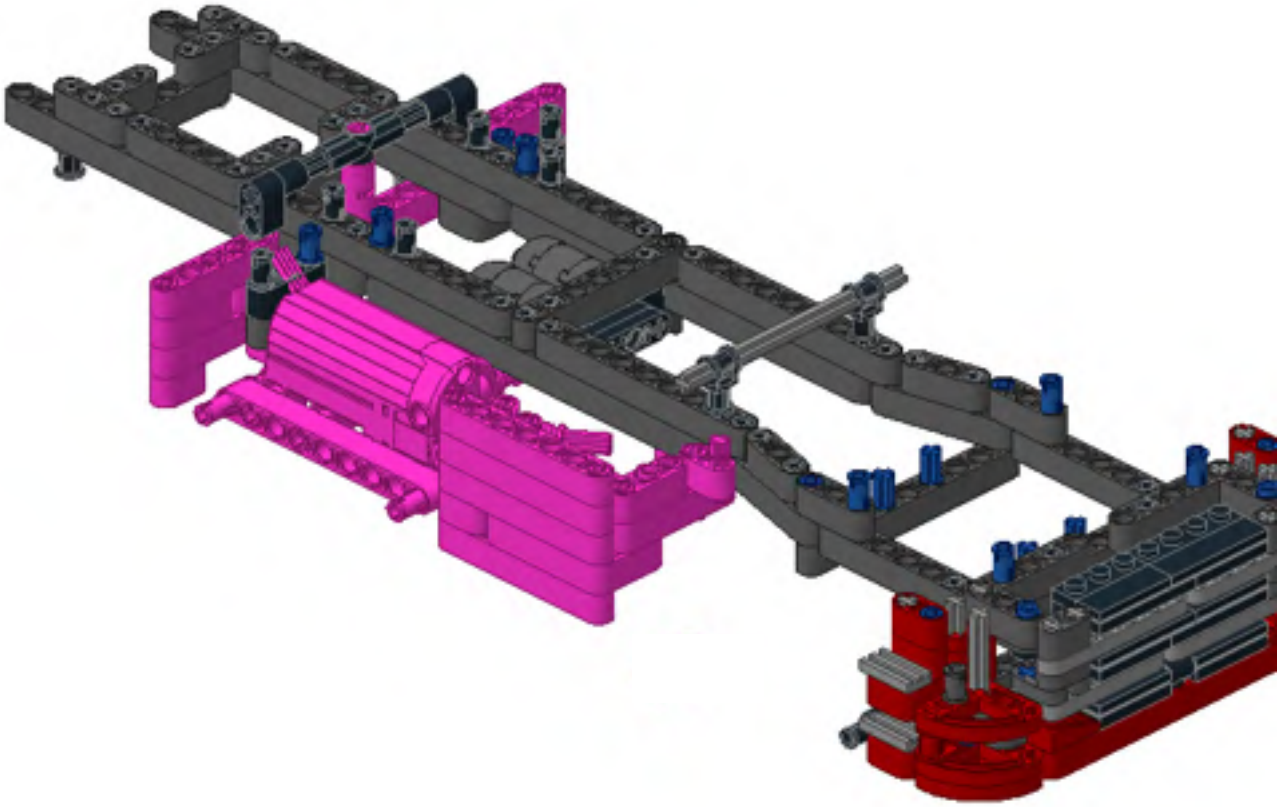

1

2x
2x
1x

2

1x
1x
1x
2x

3

2x
2x

4

1x
1x
1x

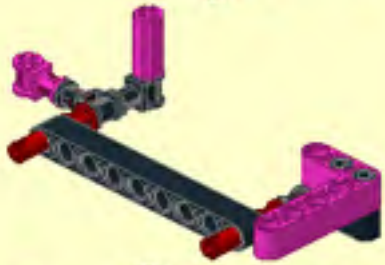

5

1x
1x
2x

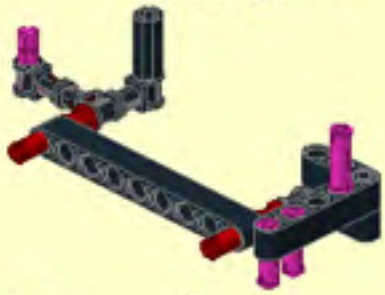

6

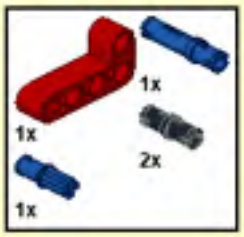
1x
1x
2x
1x

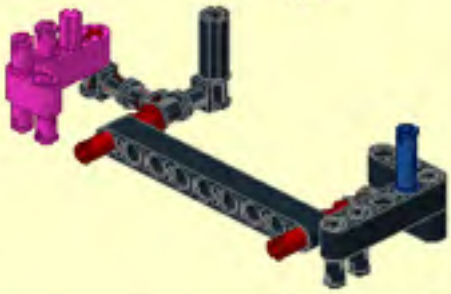

7

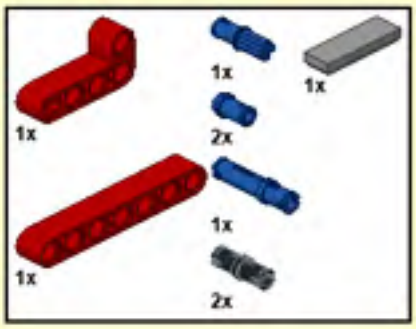
1x
1x
1x
2x
1x
1x
2x

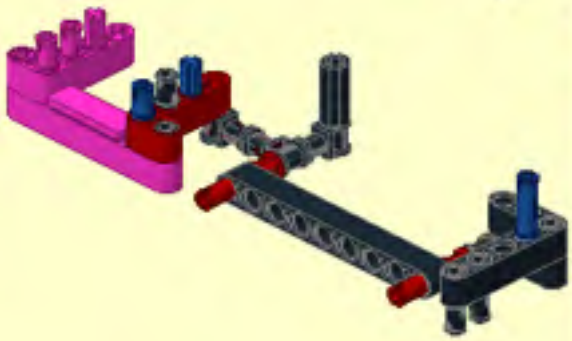

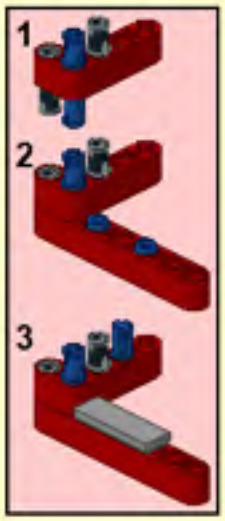
1
2
3

8

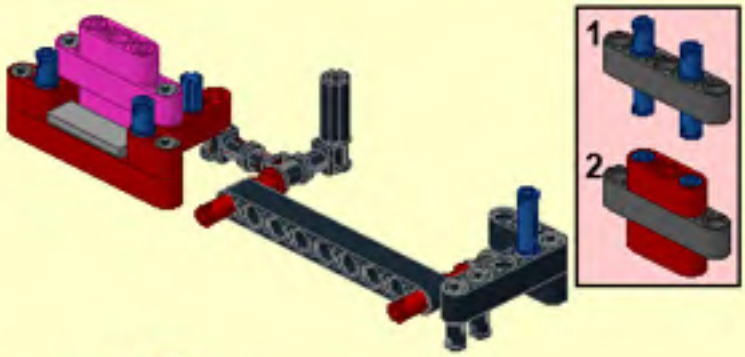

9

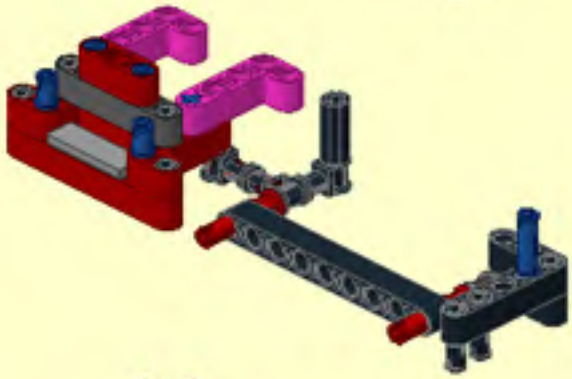

10

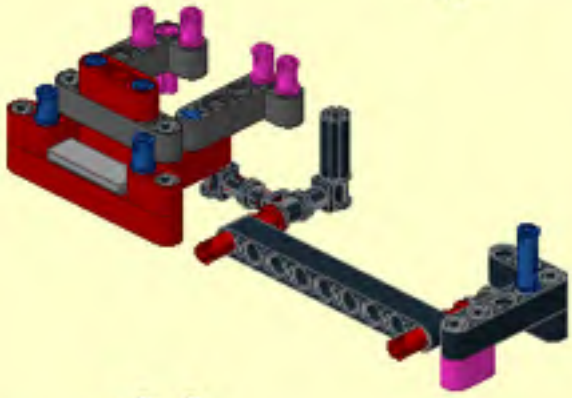

11

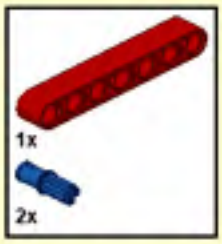

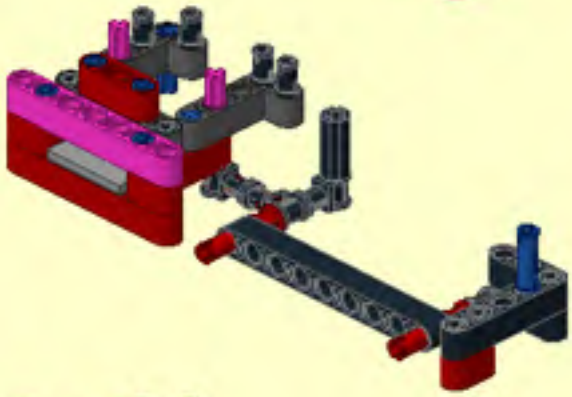

12

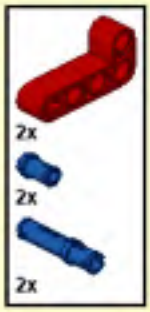

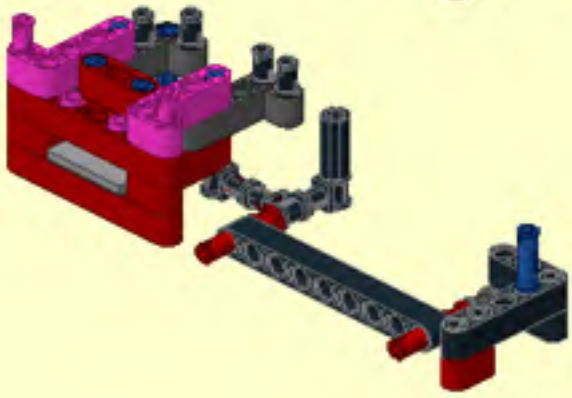

13

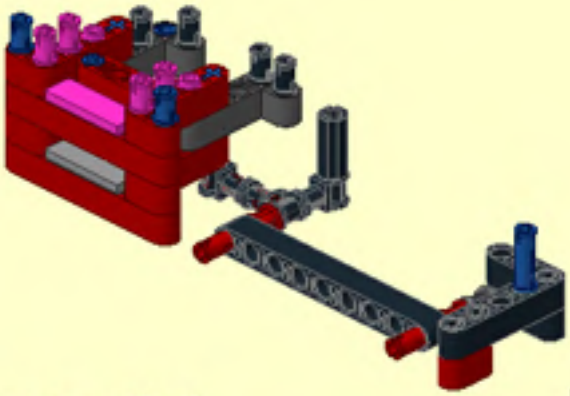

14

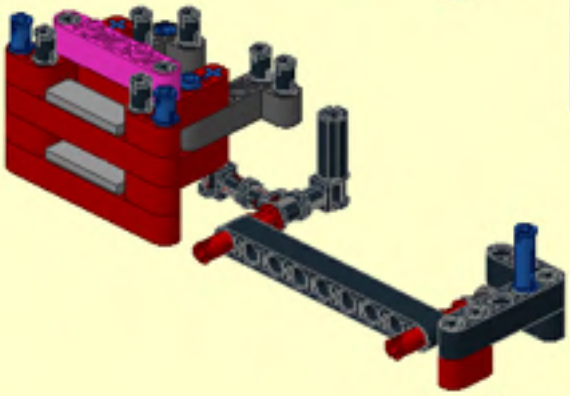

15

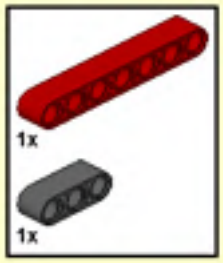

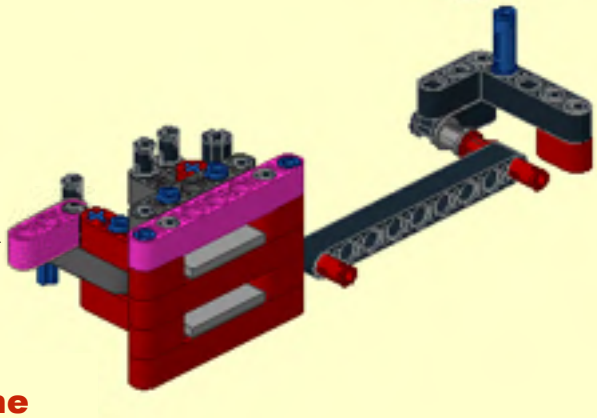

Do not remove this! It has disappeared in the rest of the instructions.

29

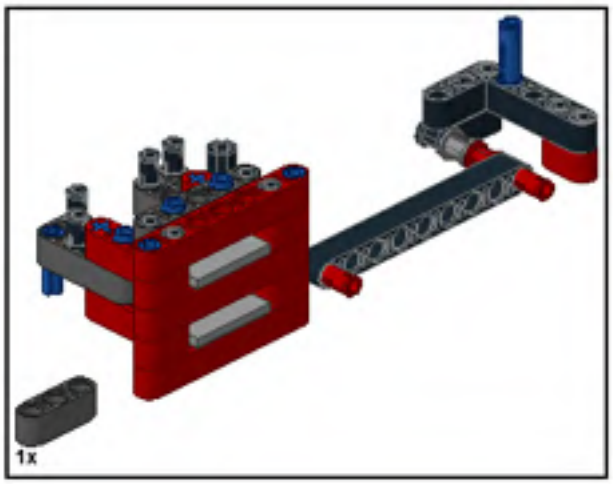

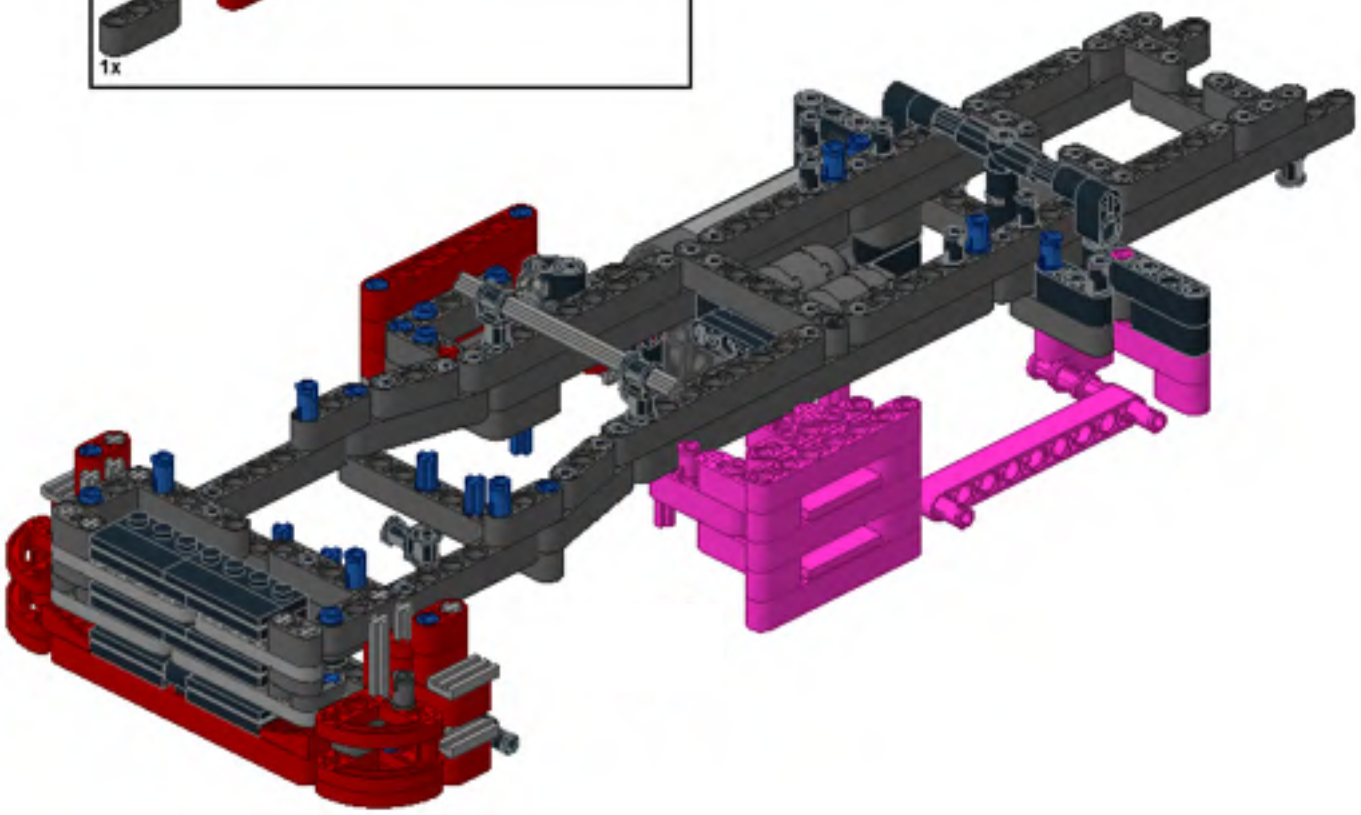

1

2

3

4

5

6

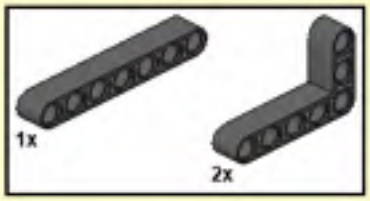

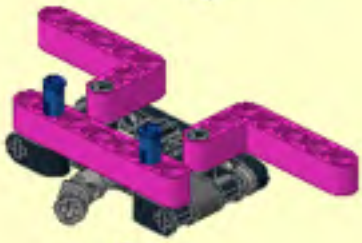

7

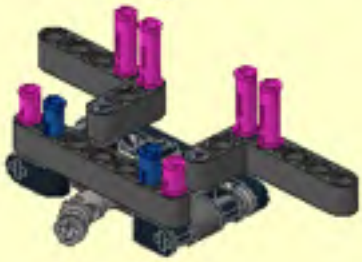

8

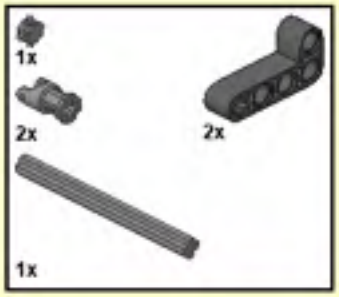

The two L pieces should change places with each other.

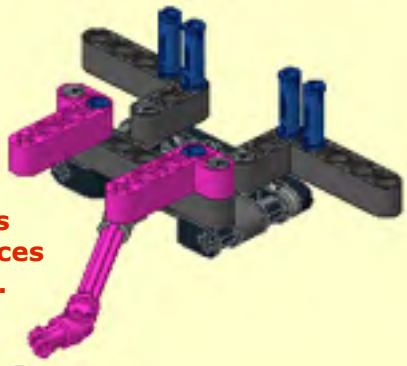

9

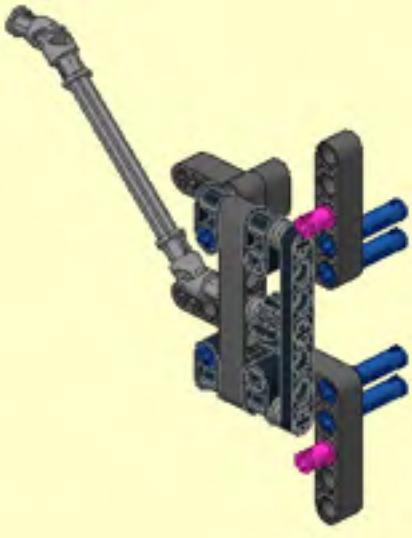

10

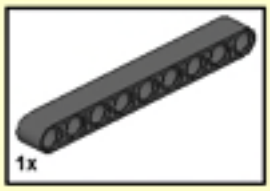

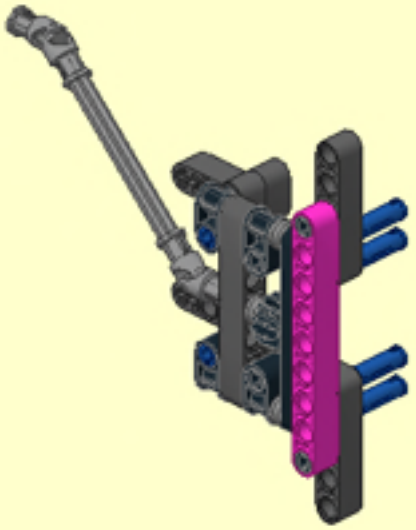

1

2

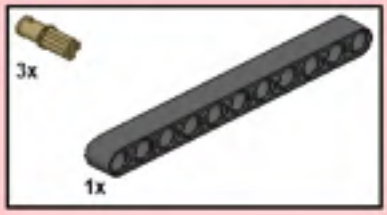

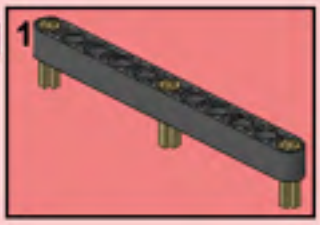

3

4

5

6

7

8

11

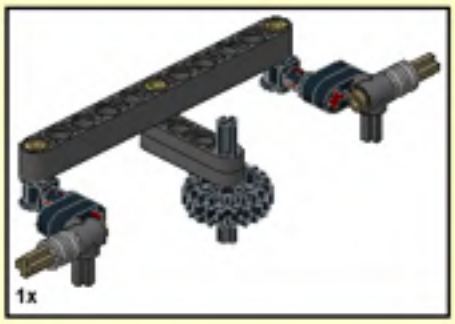

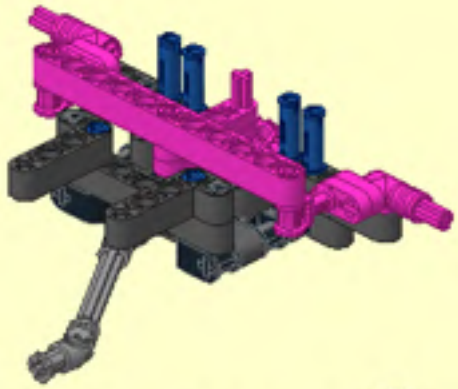

12

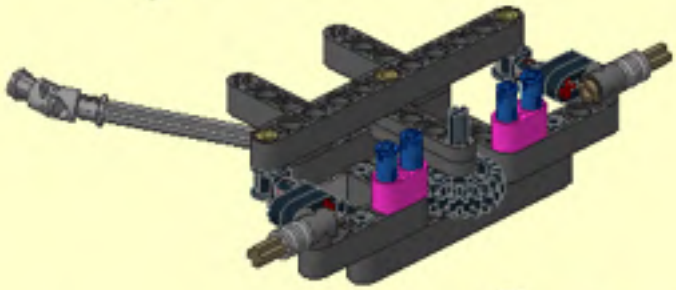

13

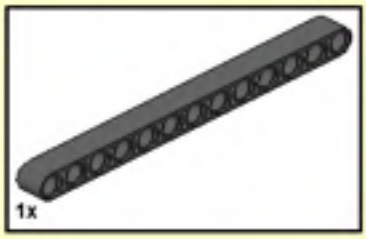

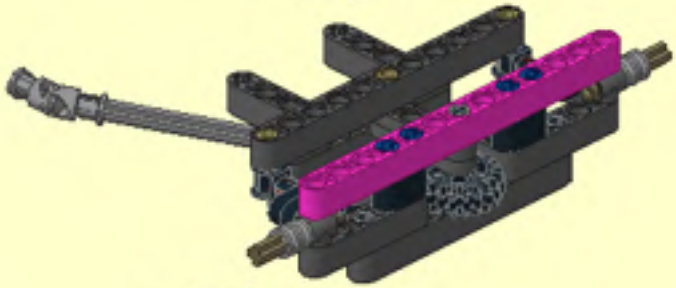

14

30

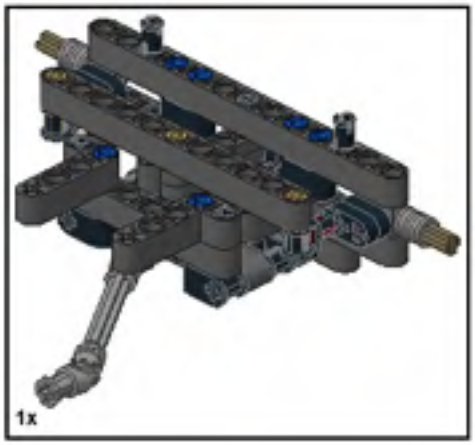

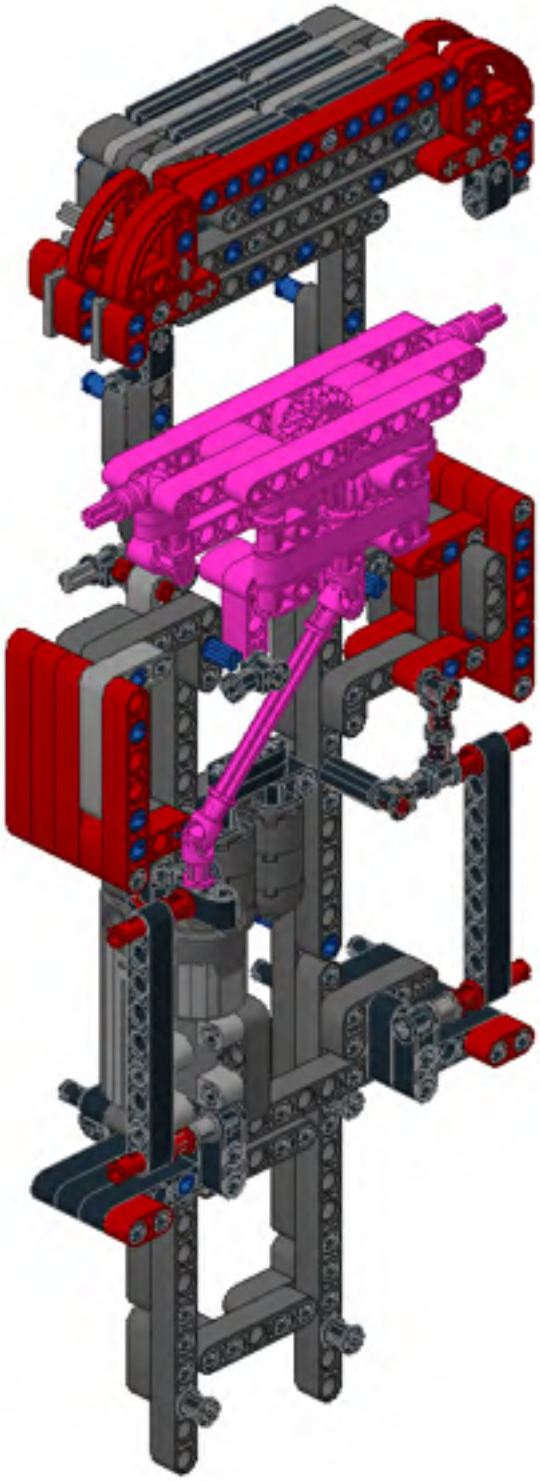

1

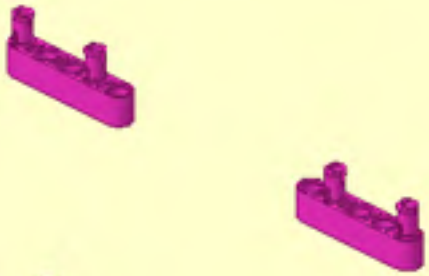

2

3

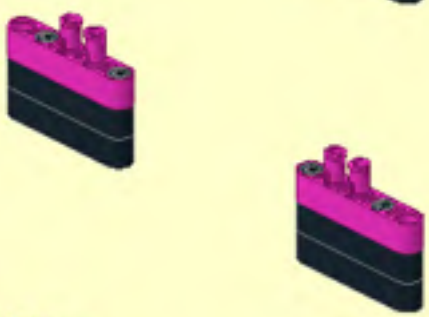

4

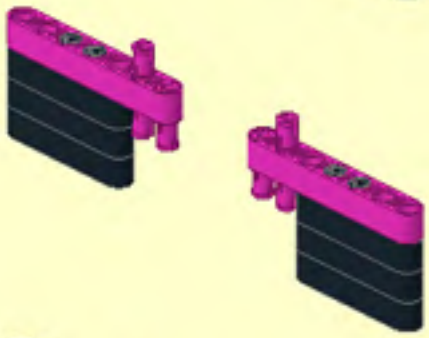

5

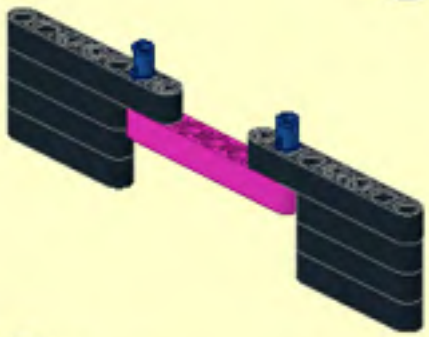

6

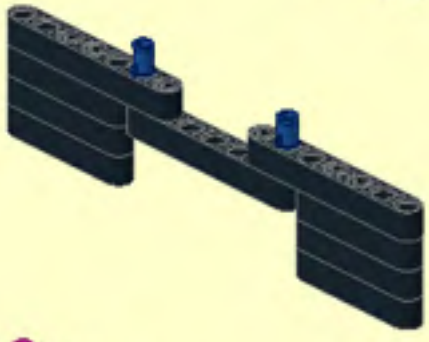

7

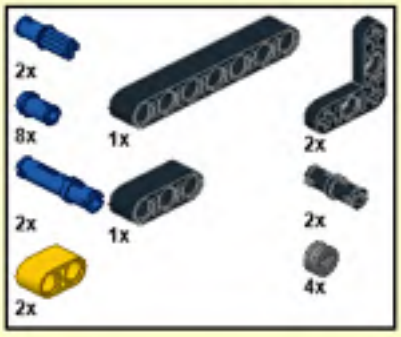

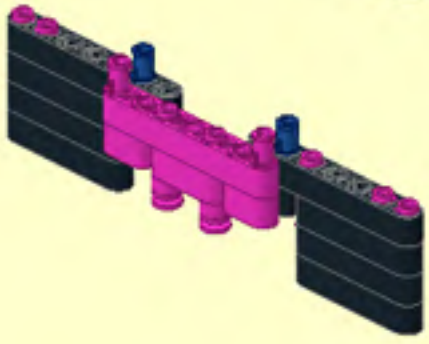

8

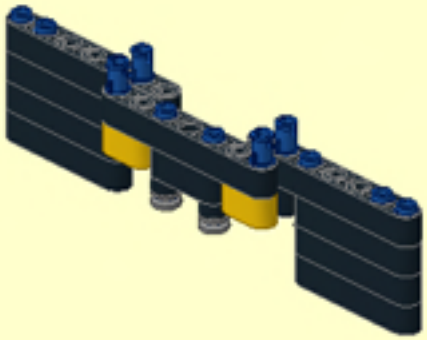

31

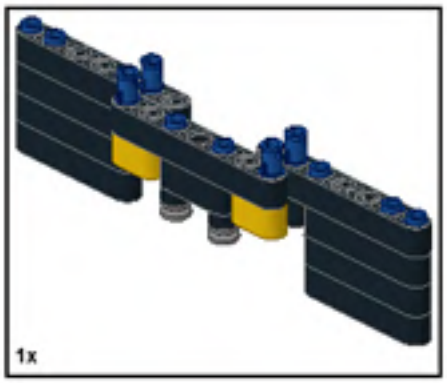

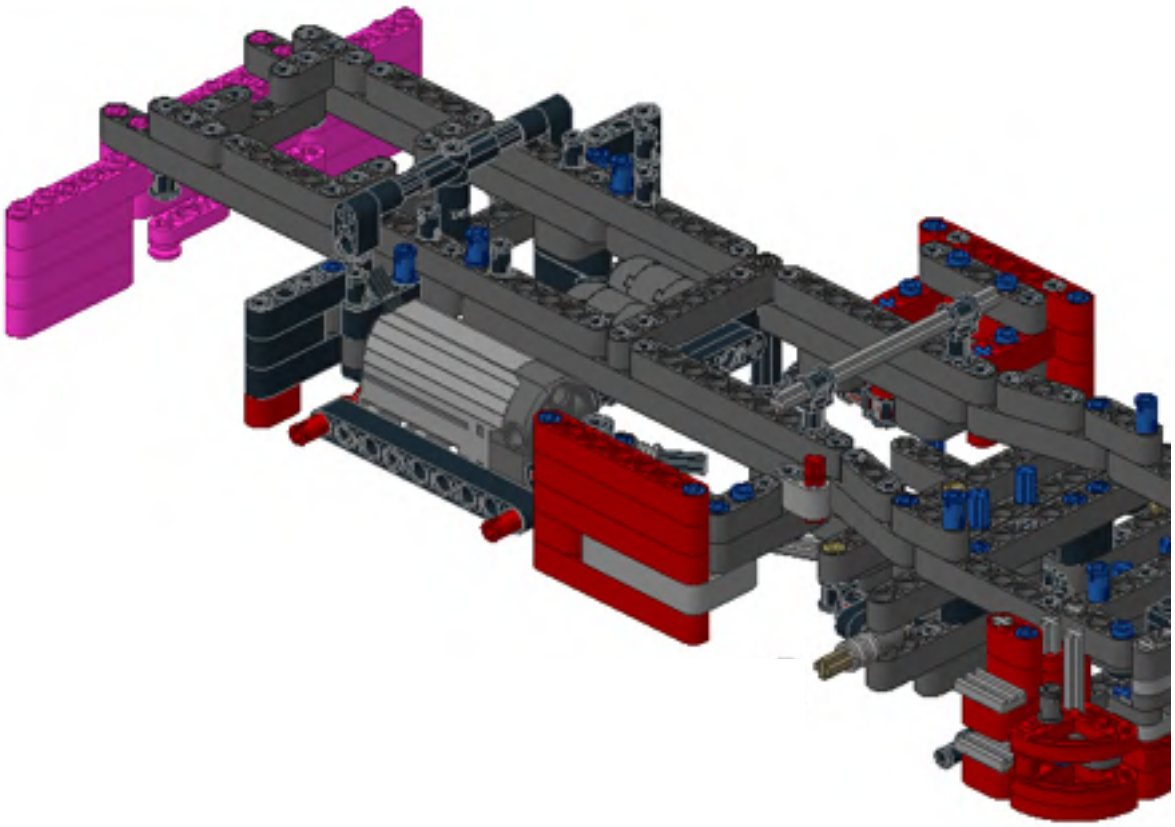

1

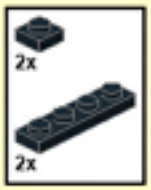

2

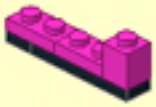

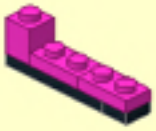

3

4

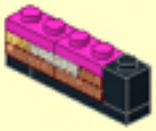

32

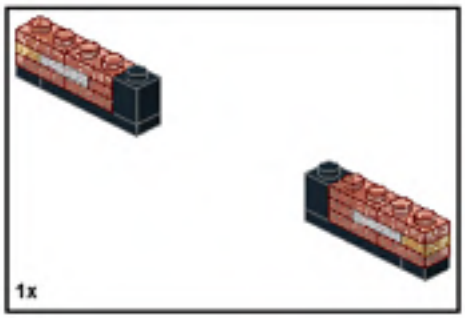

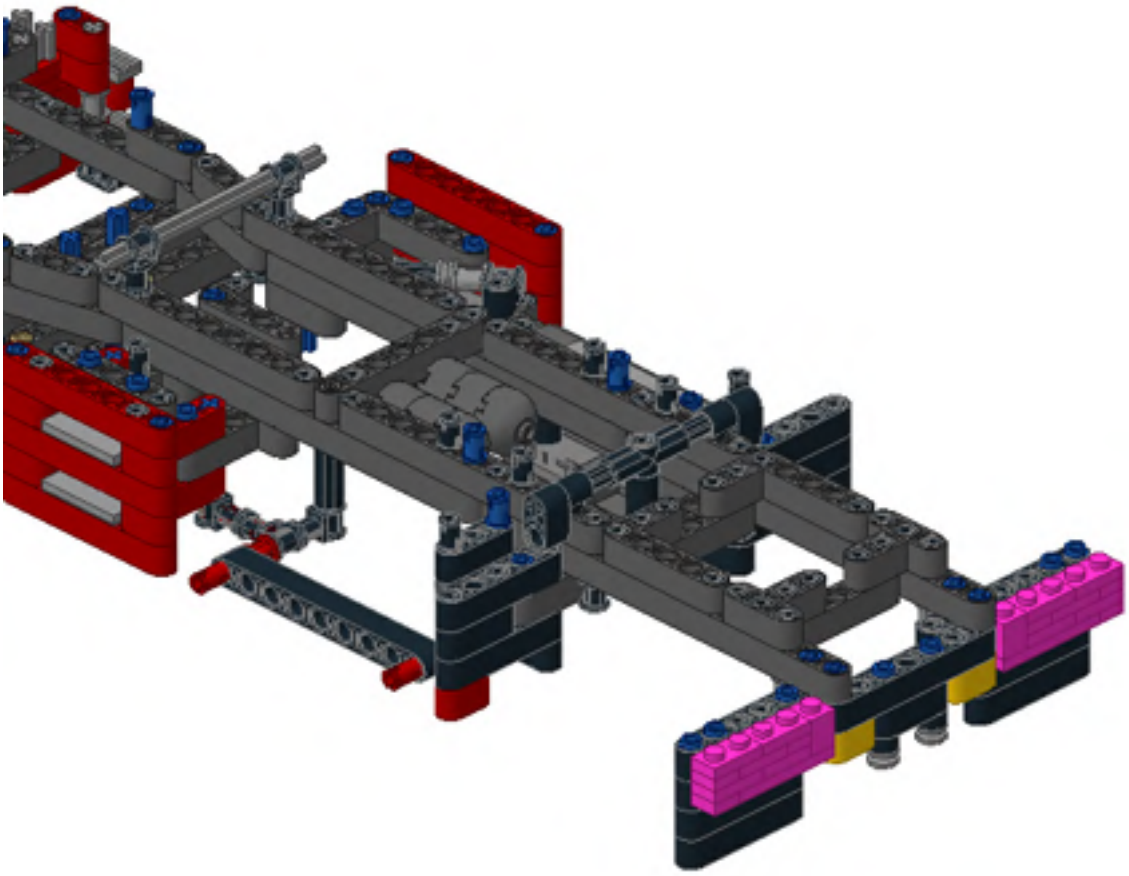

1

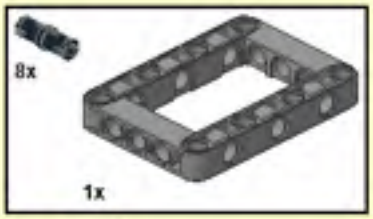

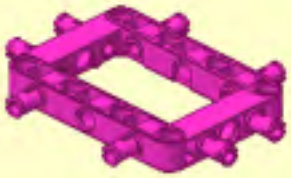

2

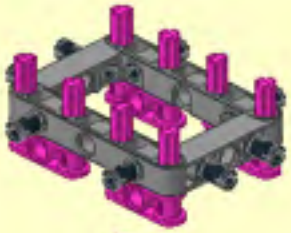

3

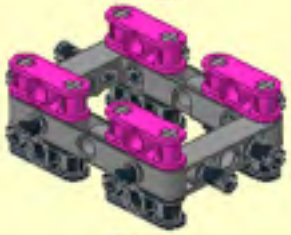

4

5

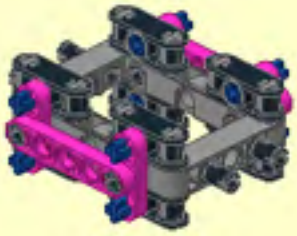

6

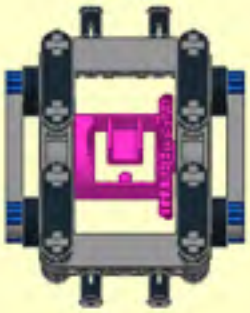

7

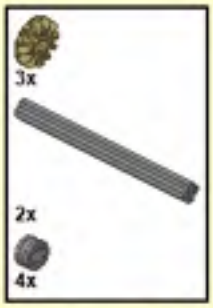

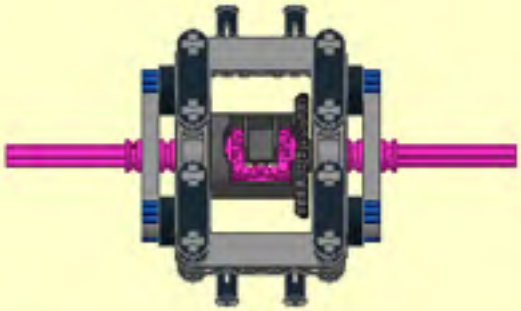

8

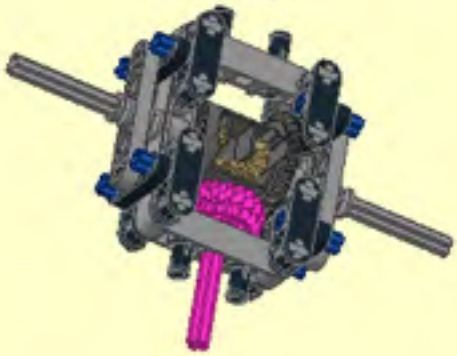

9

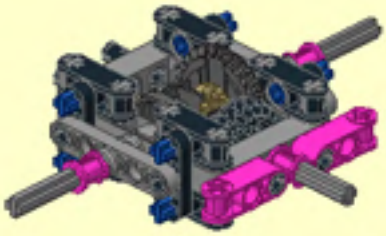

10

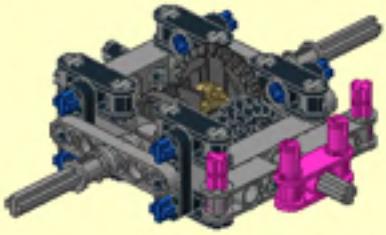

11

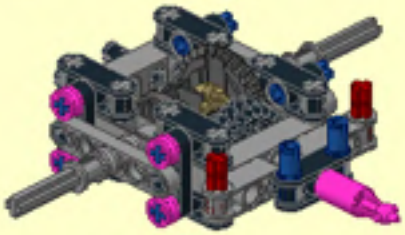

12

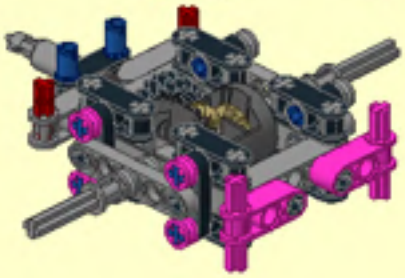

33

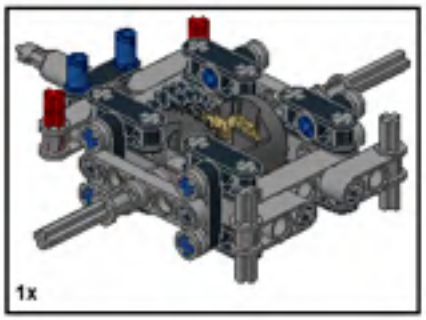

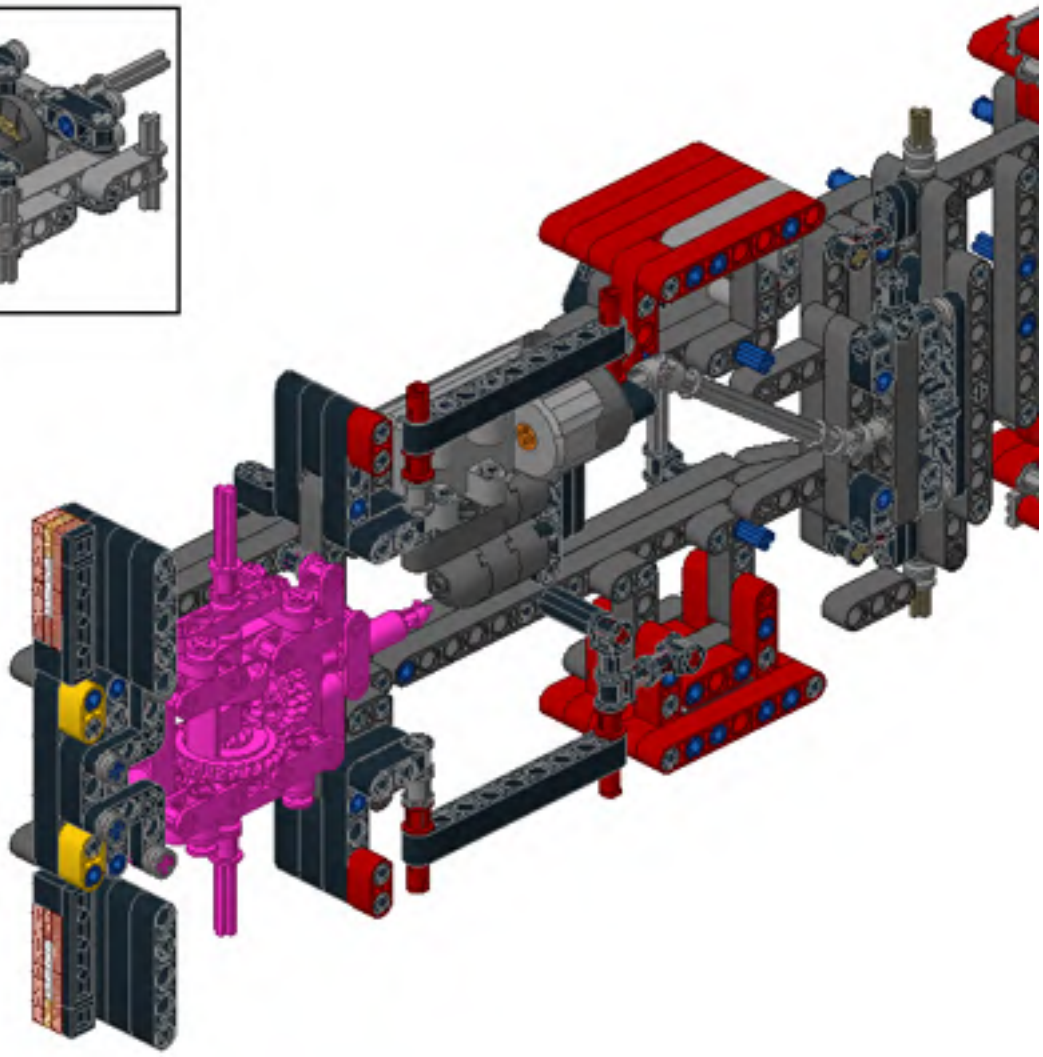

1

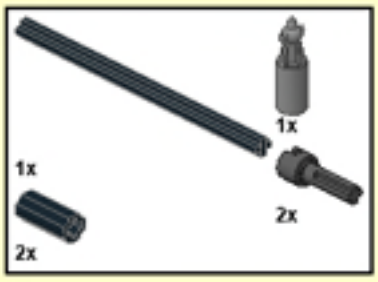

34

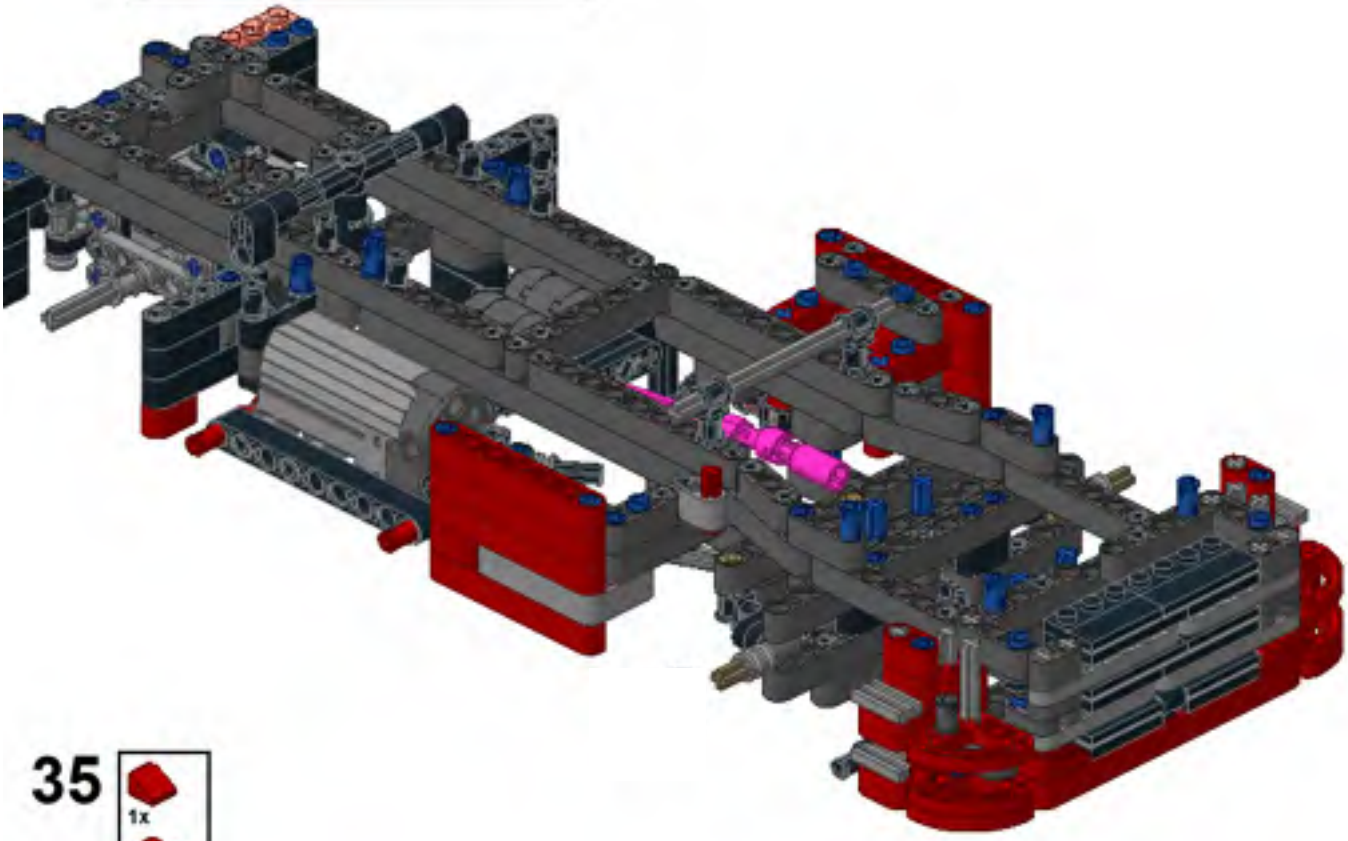

35

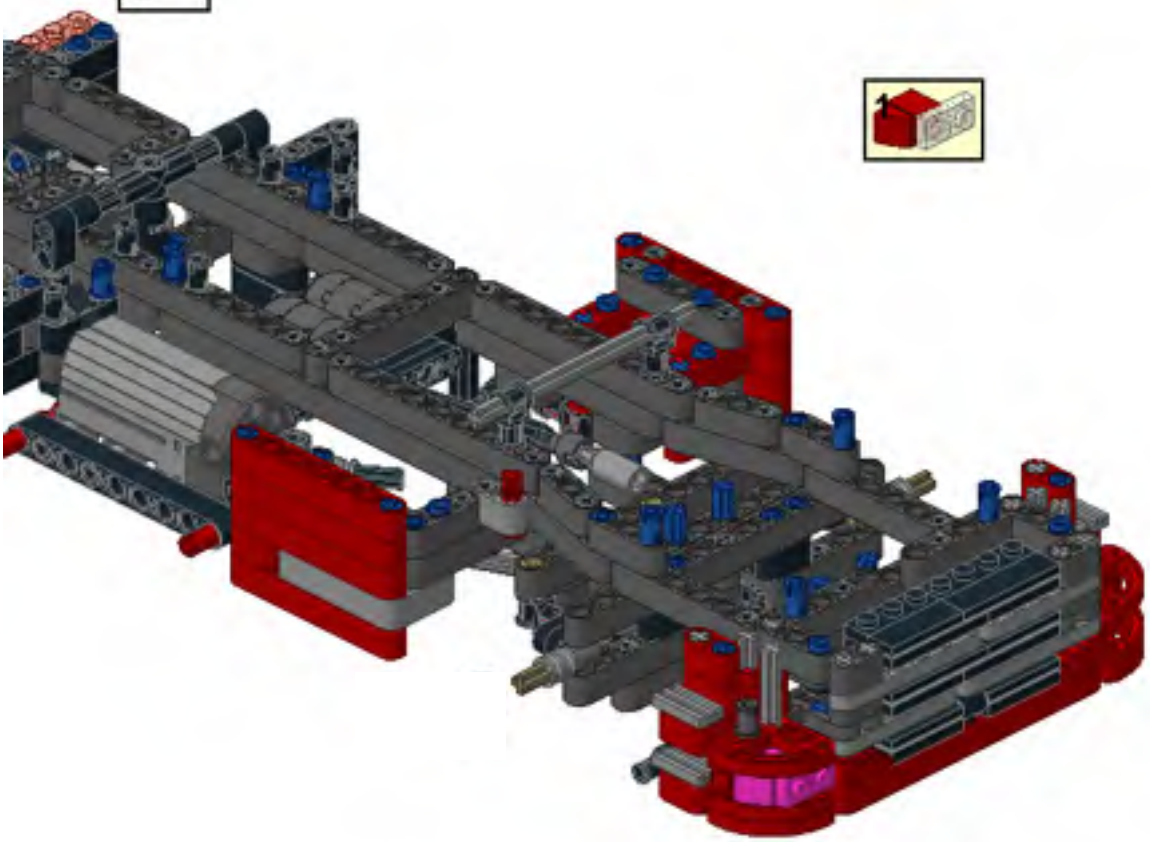

36

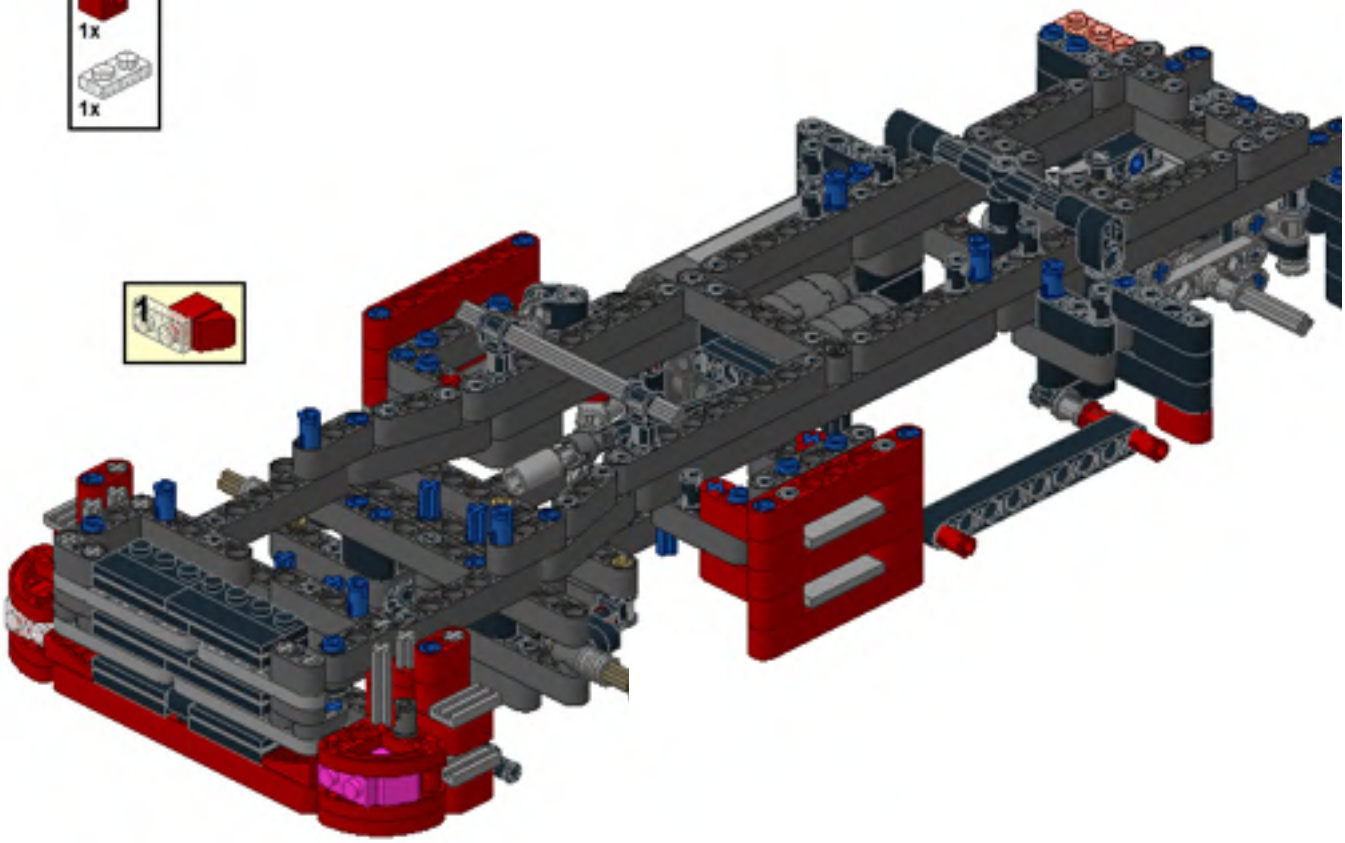

1

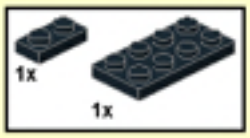

2

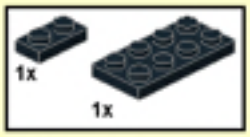

3

4

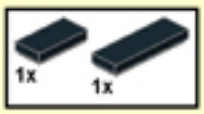

37

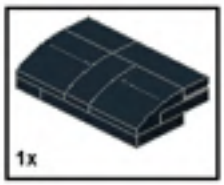

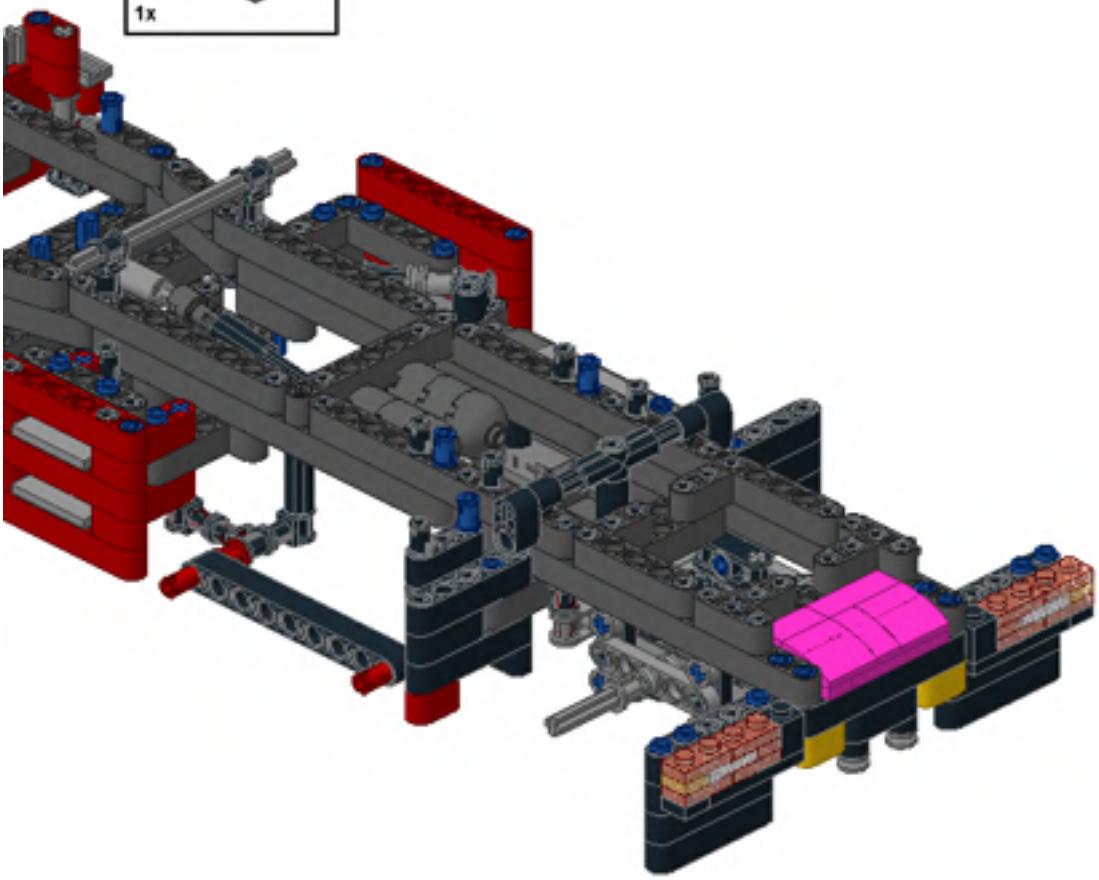

1

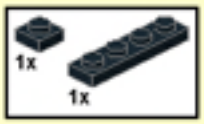

2

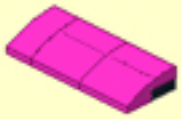

38

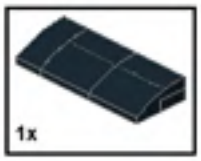

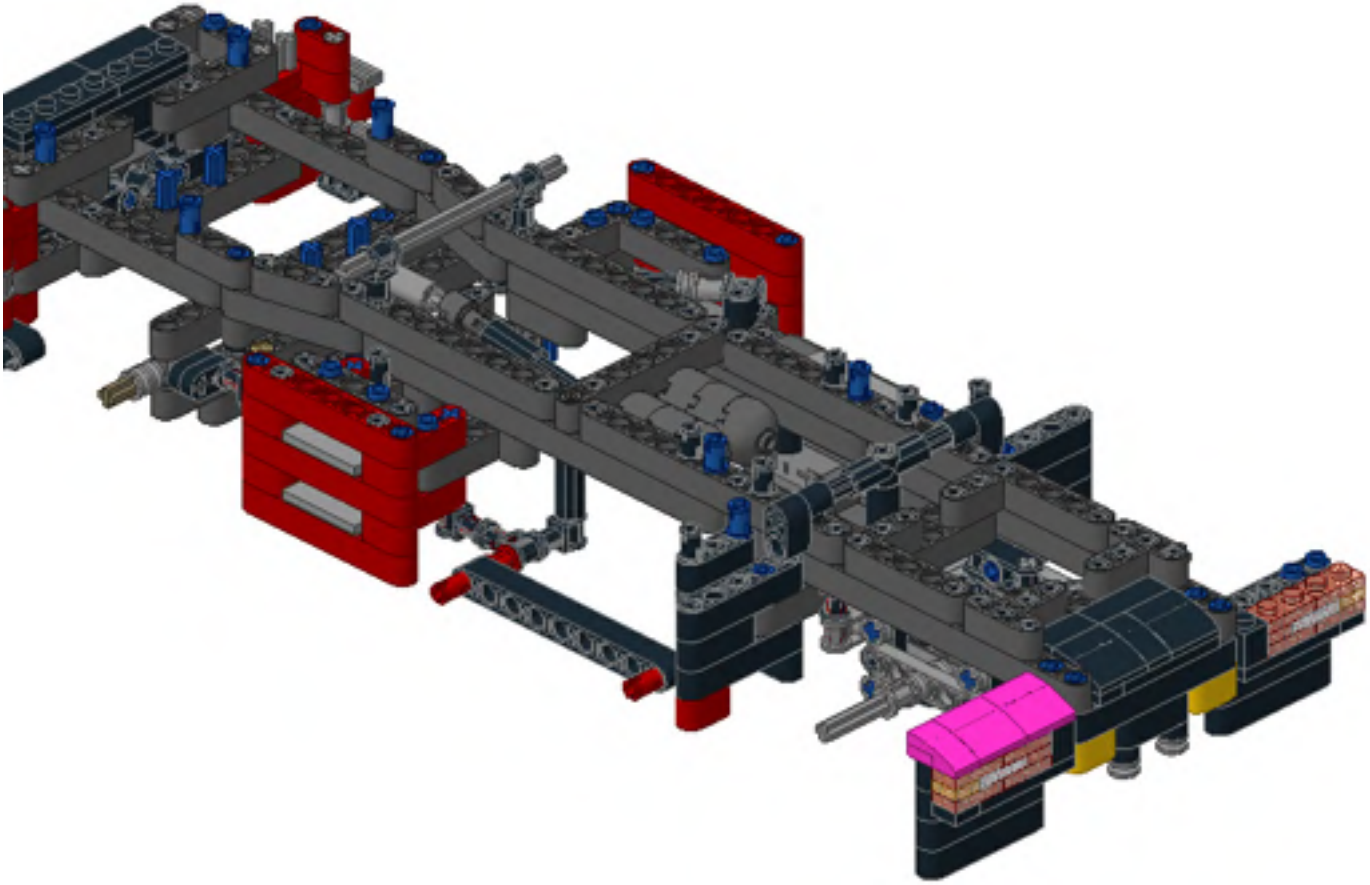

1

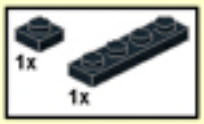

2

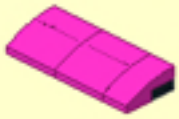

39

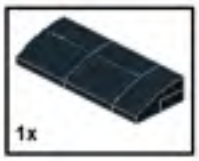

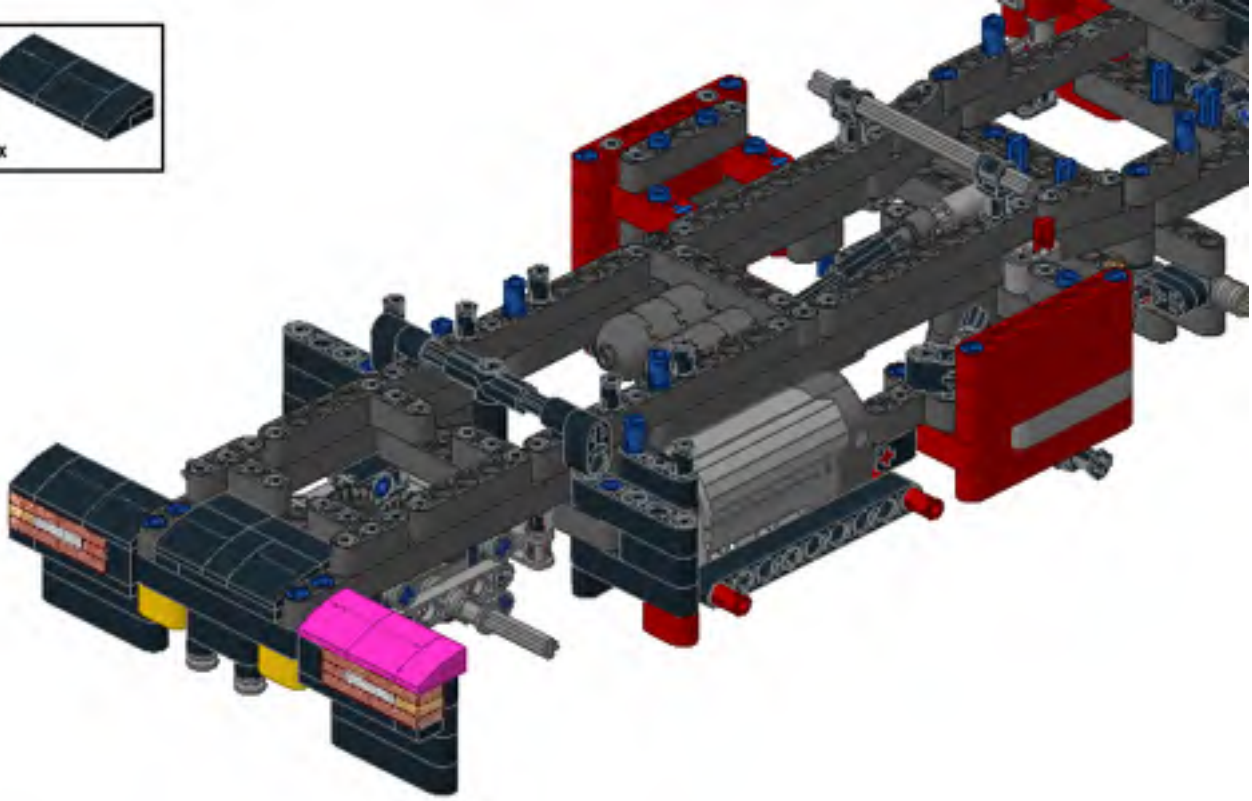

40

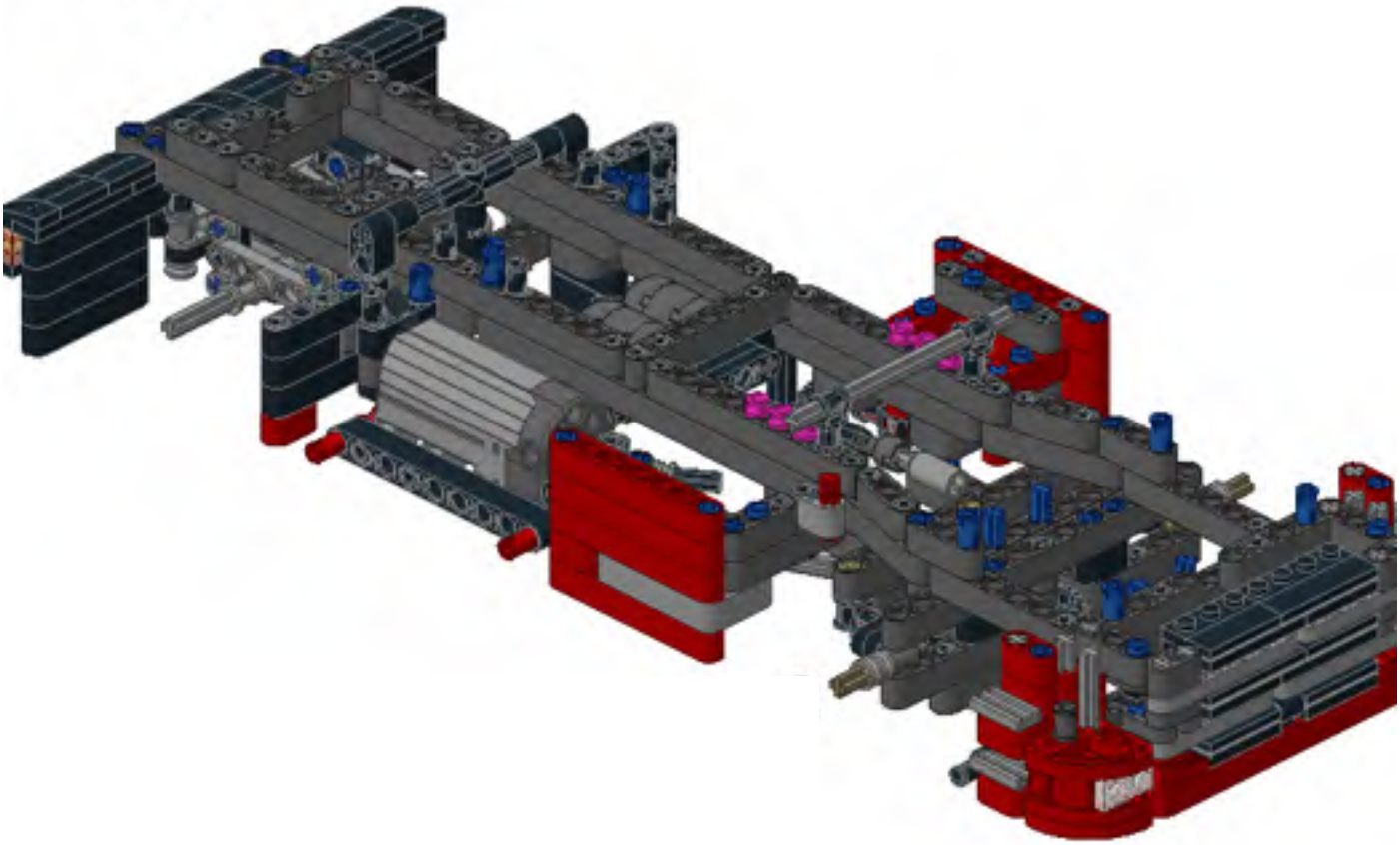

41

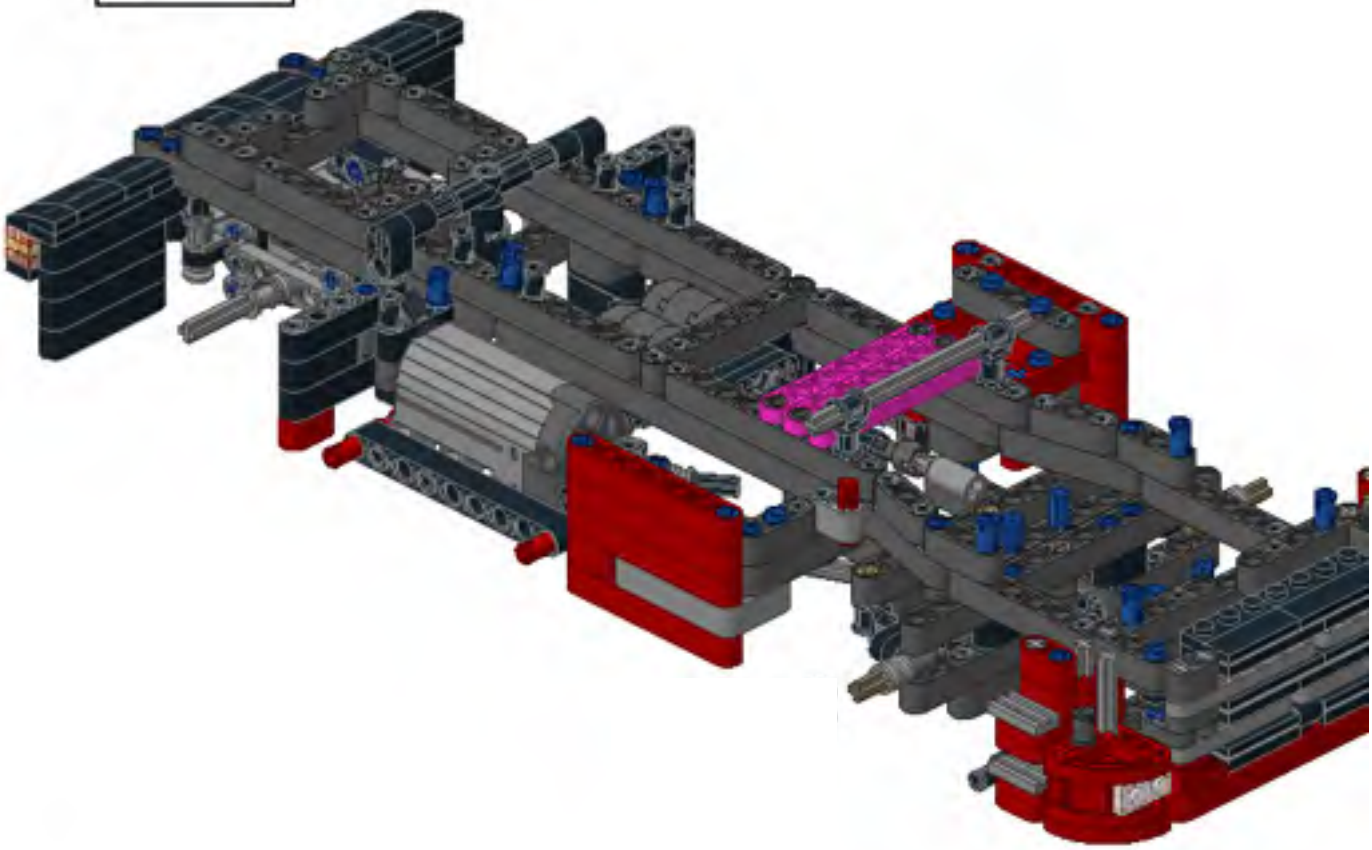

42

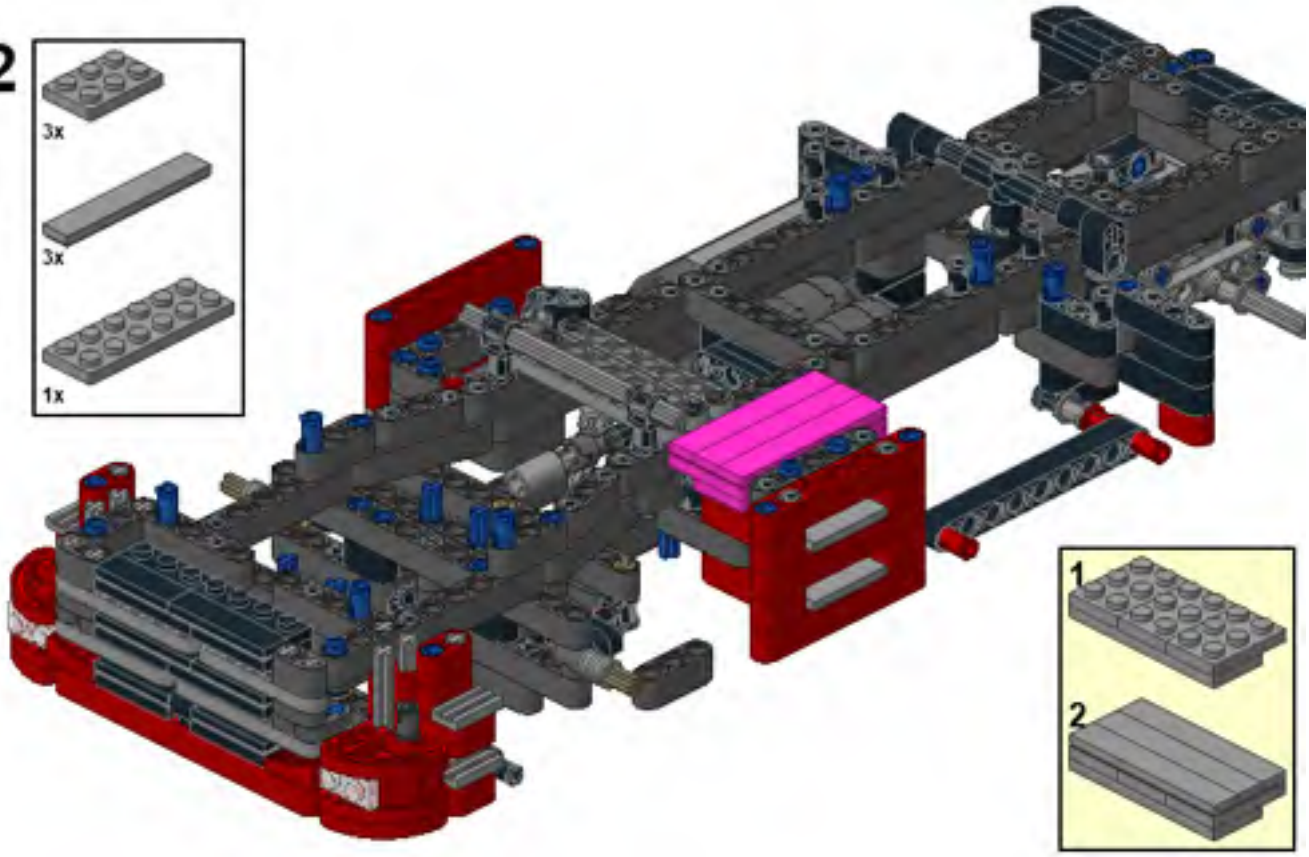

43

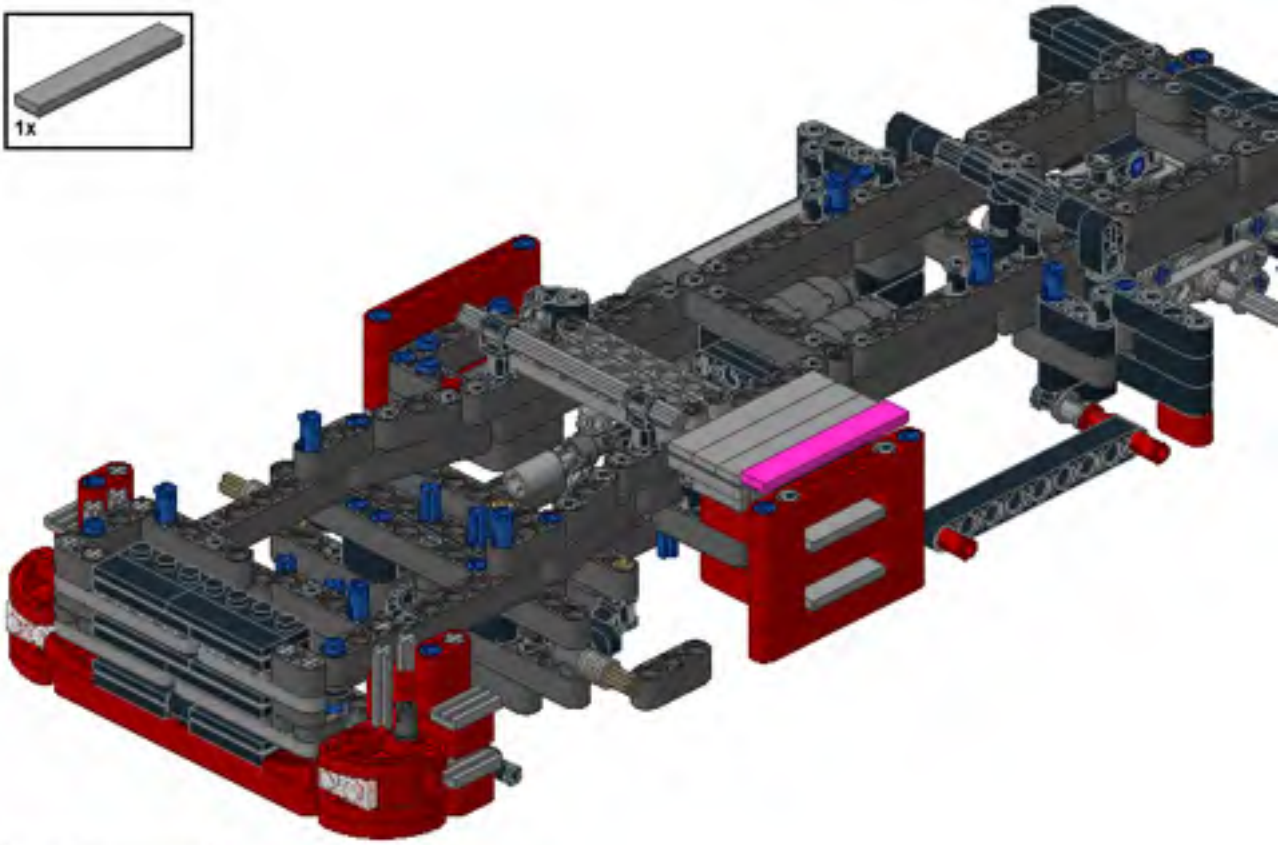

44

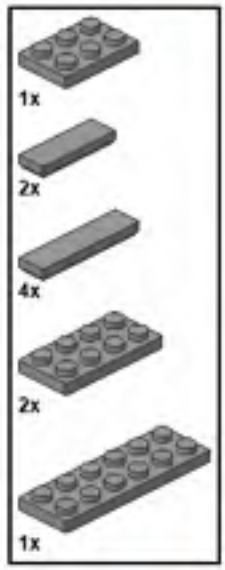

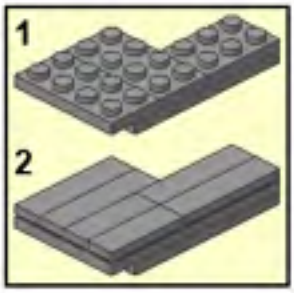

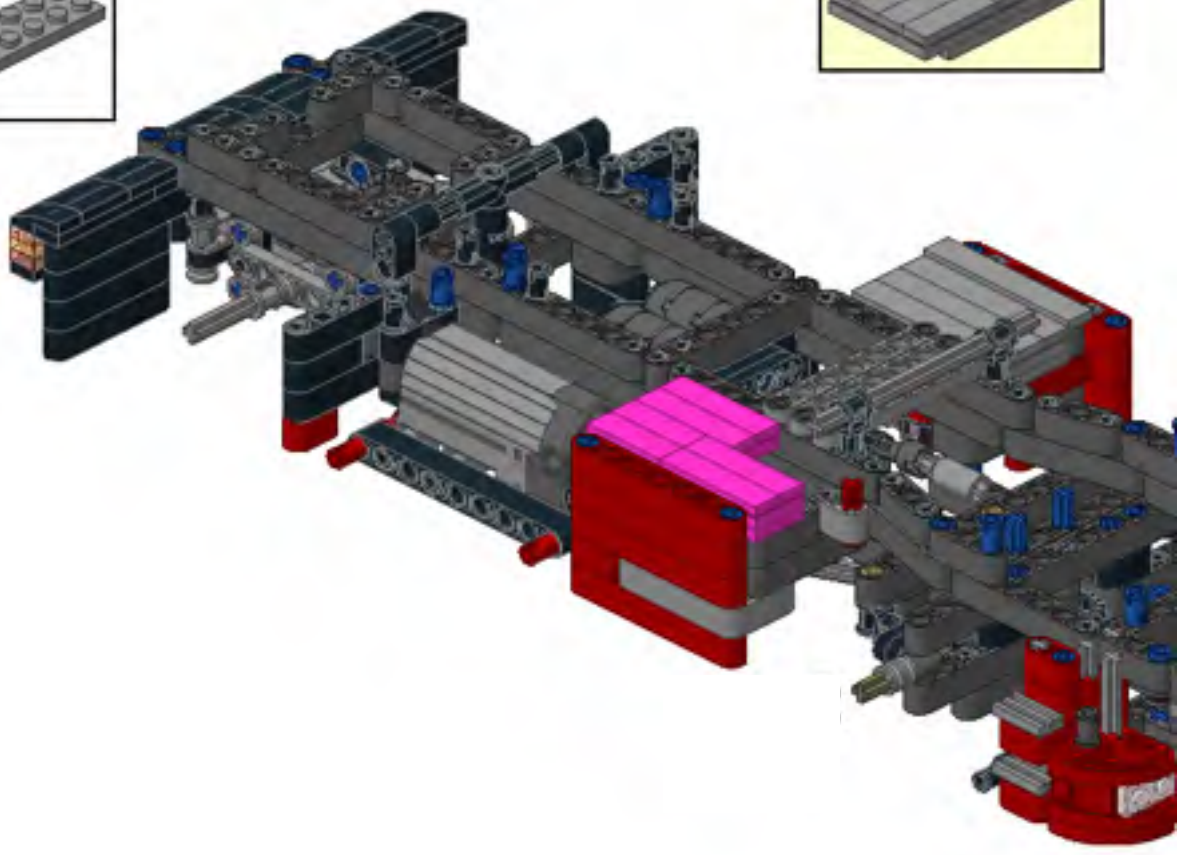

1

2

3

45

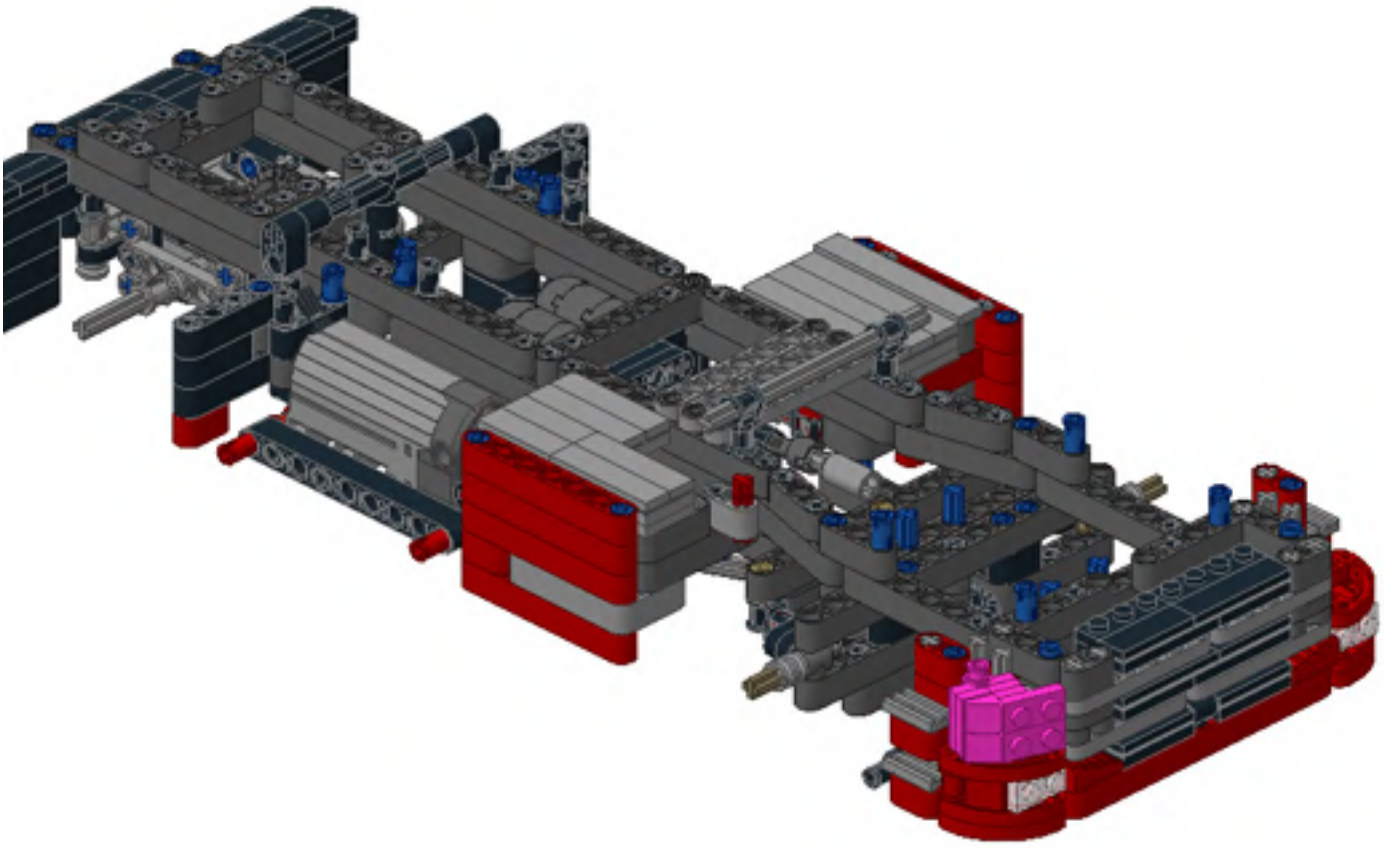

1

2

3

46

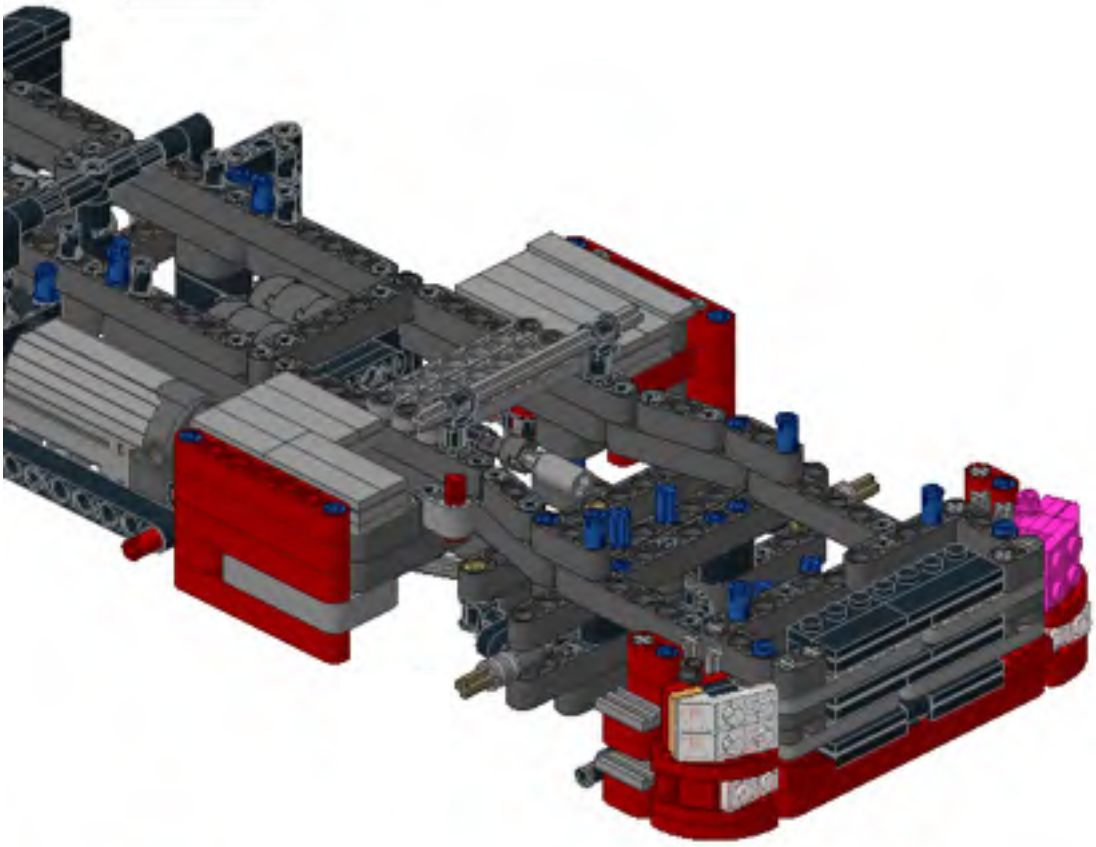

47

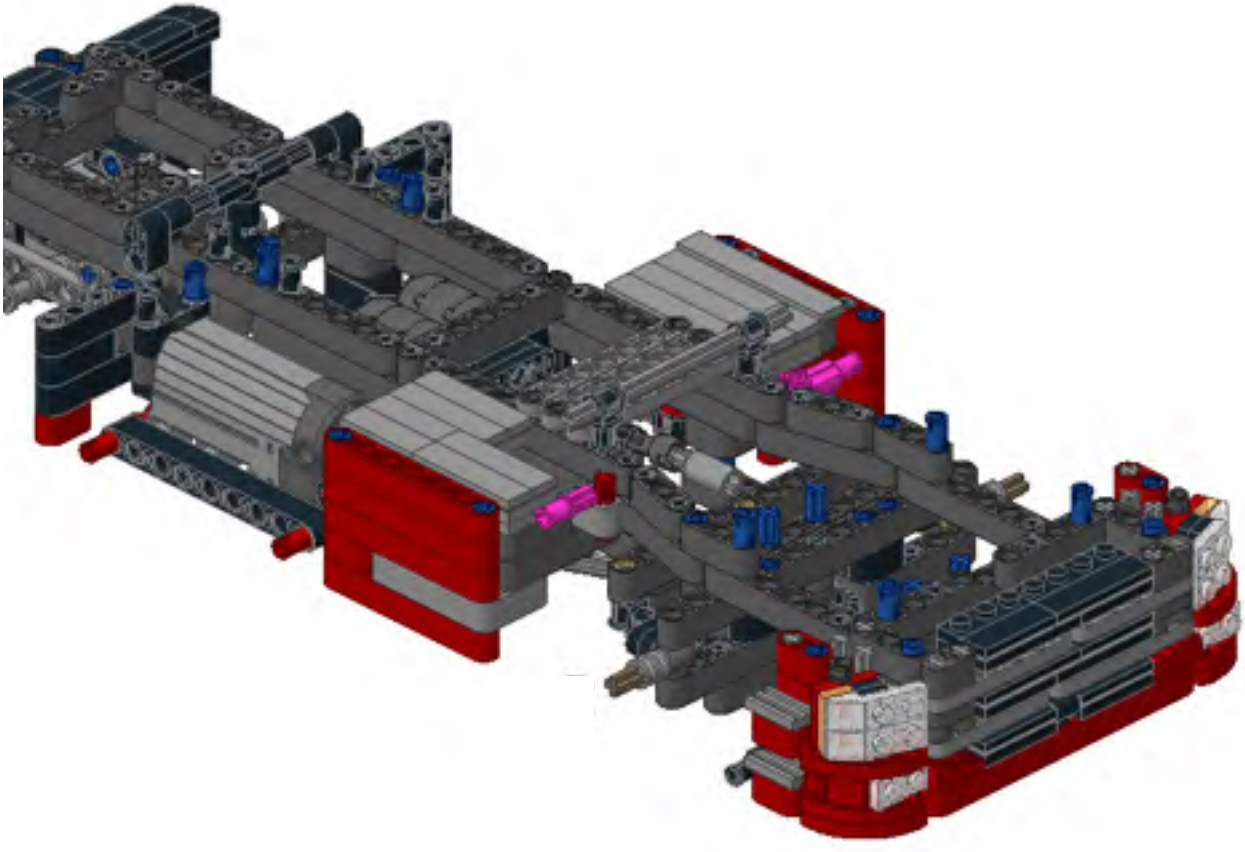

1

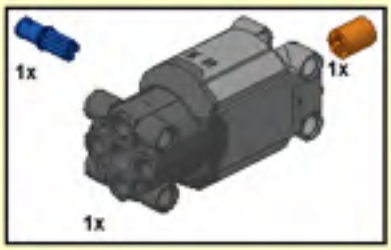

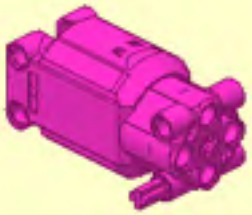

2

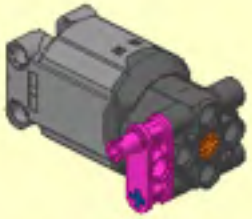

3

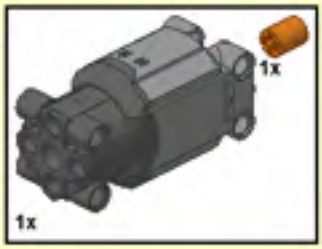

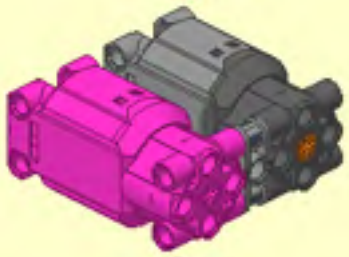

4

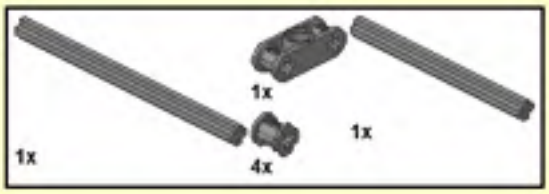

5

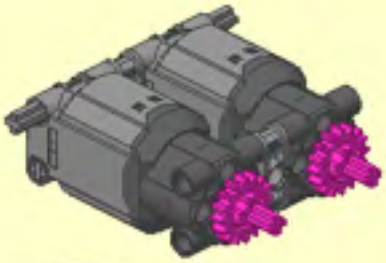

6

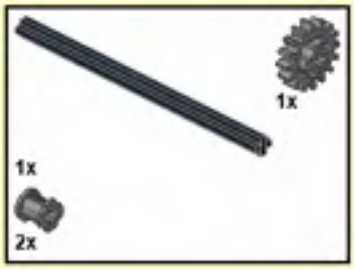

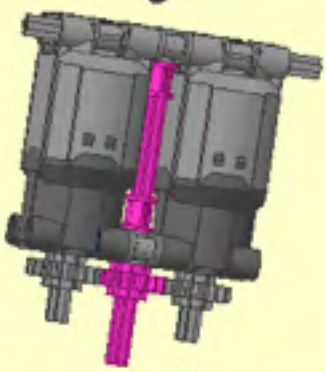

7

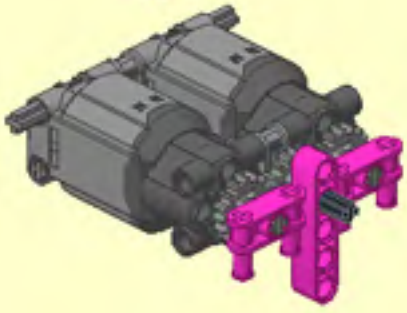

8

9

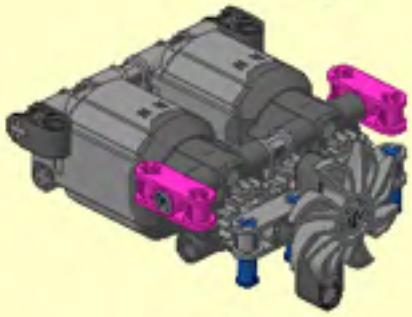

10

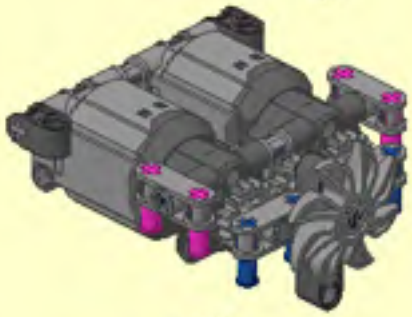

11

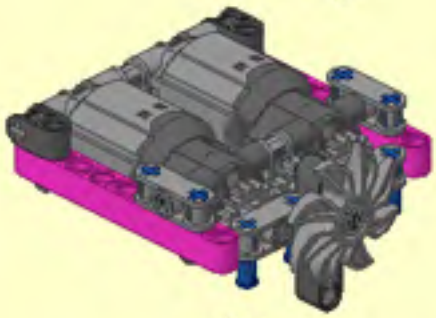

12

13

14

15

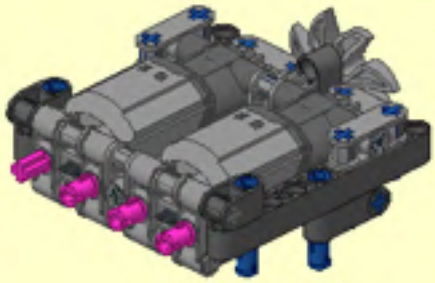

16

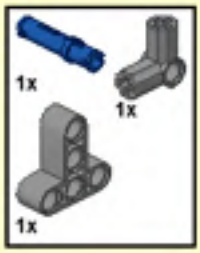

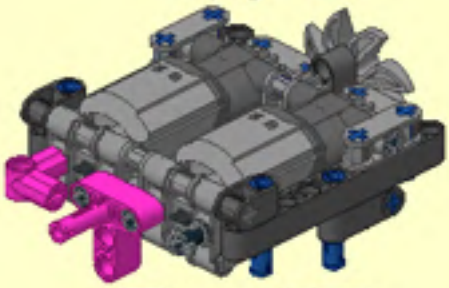

17

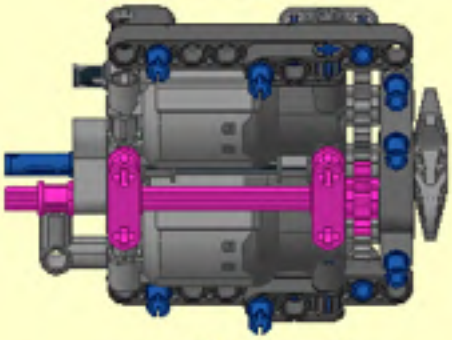

18

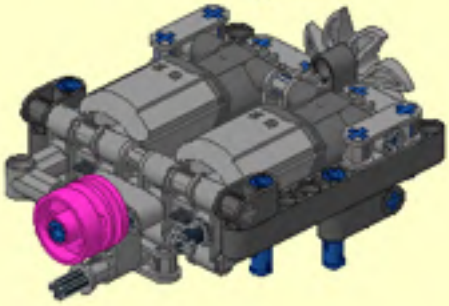

48

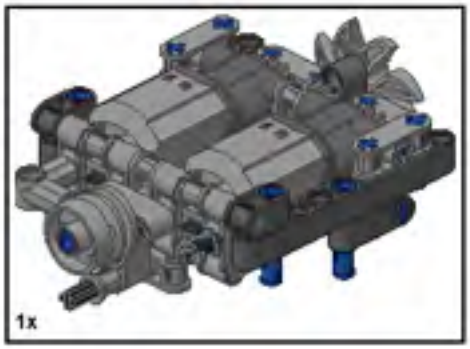

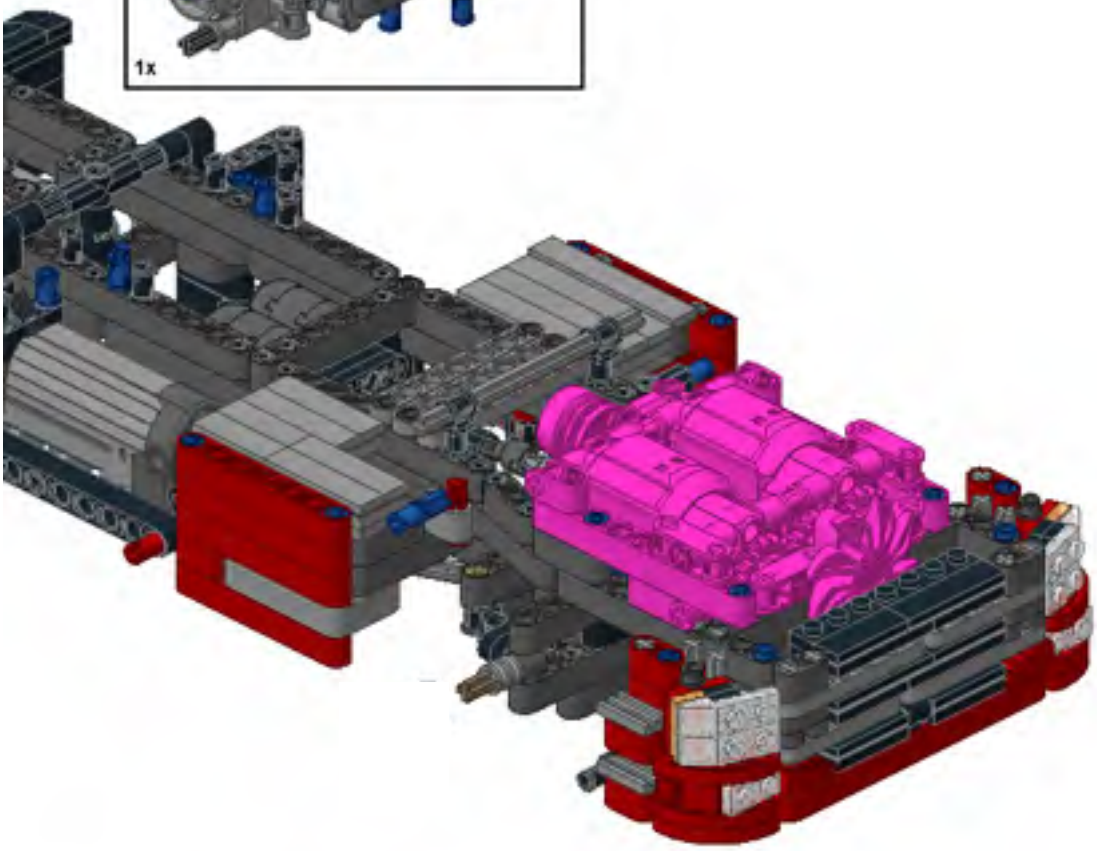

49

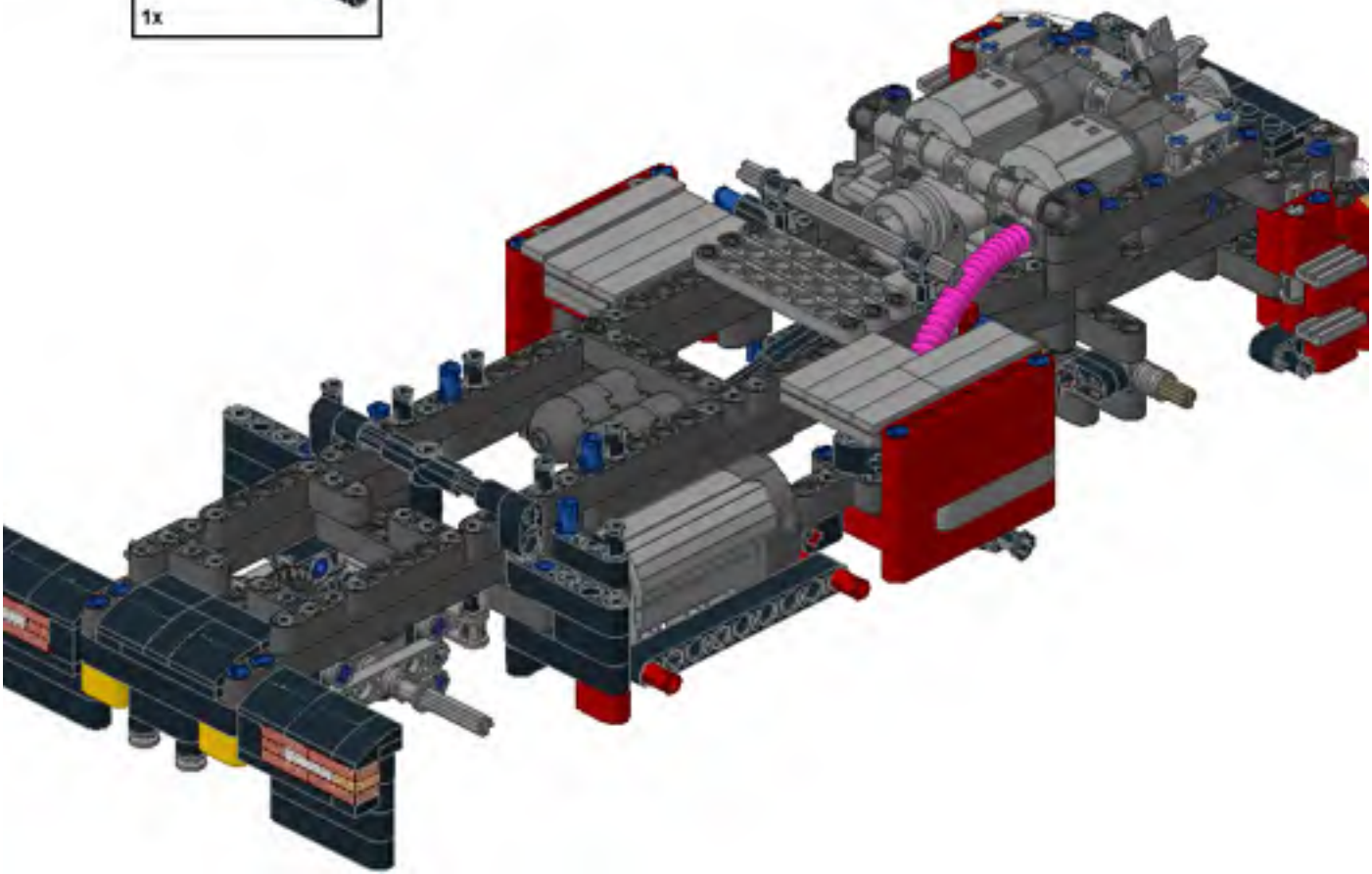

1

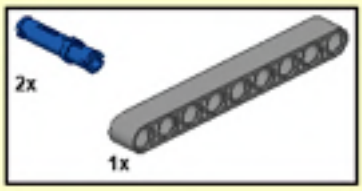

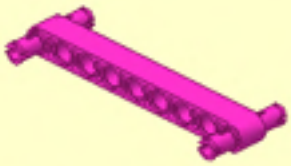

2

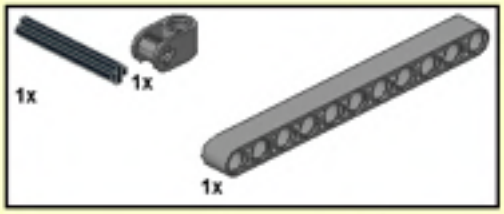

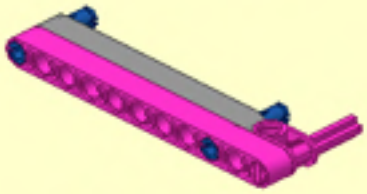

3

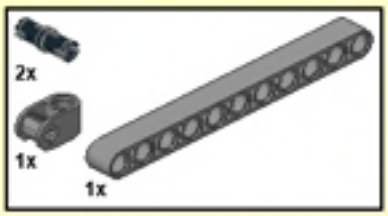

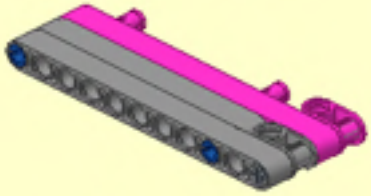

4

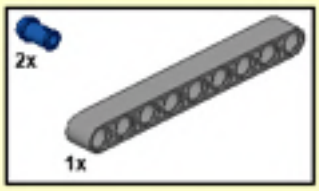

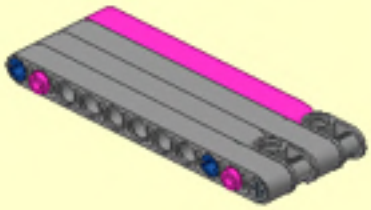

50

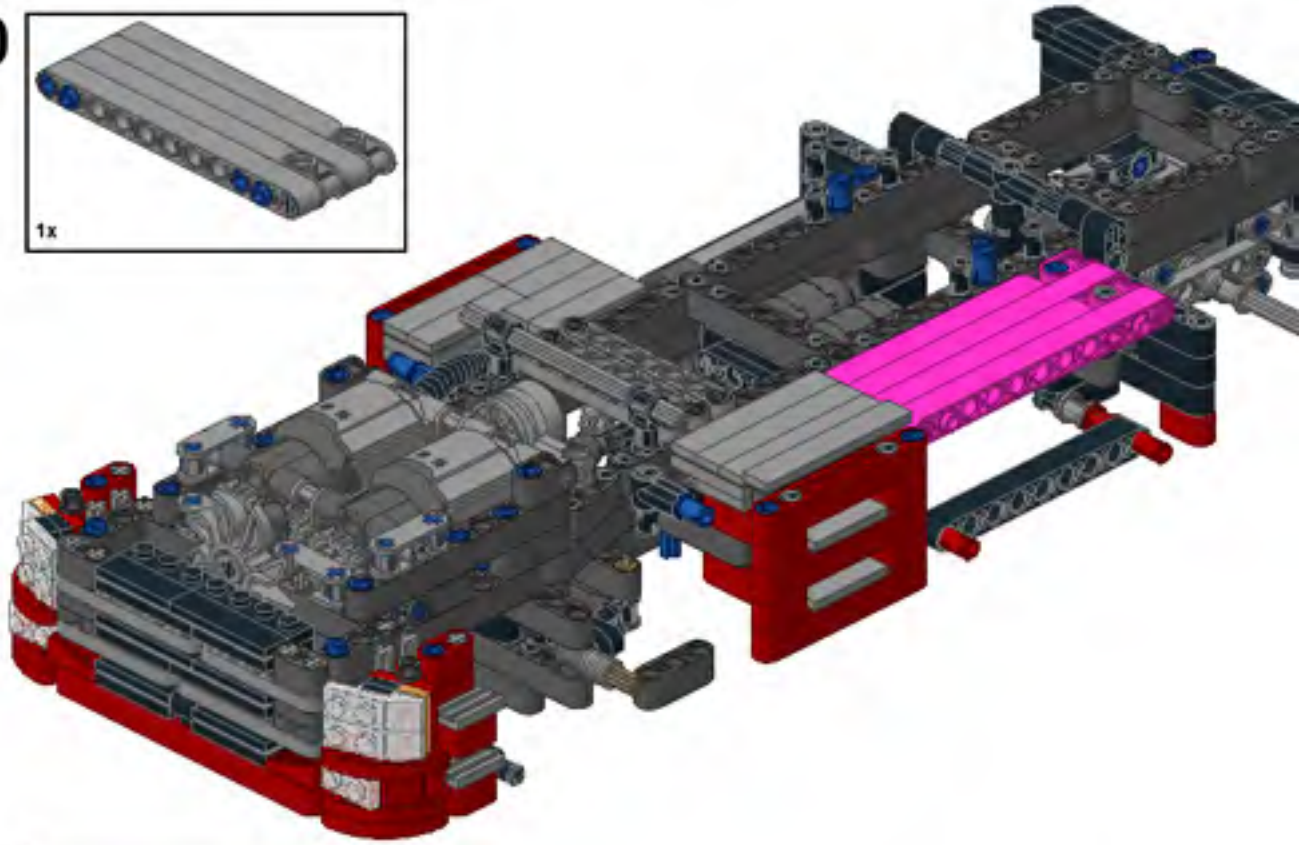

51

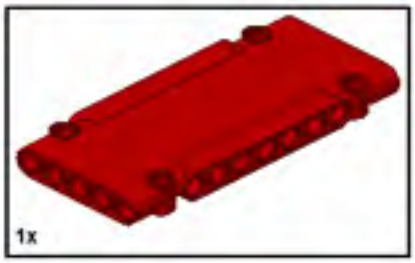

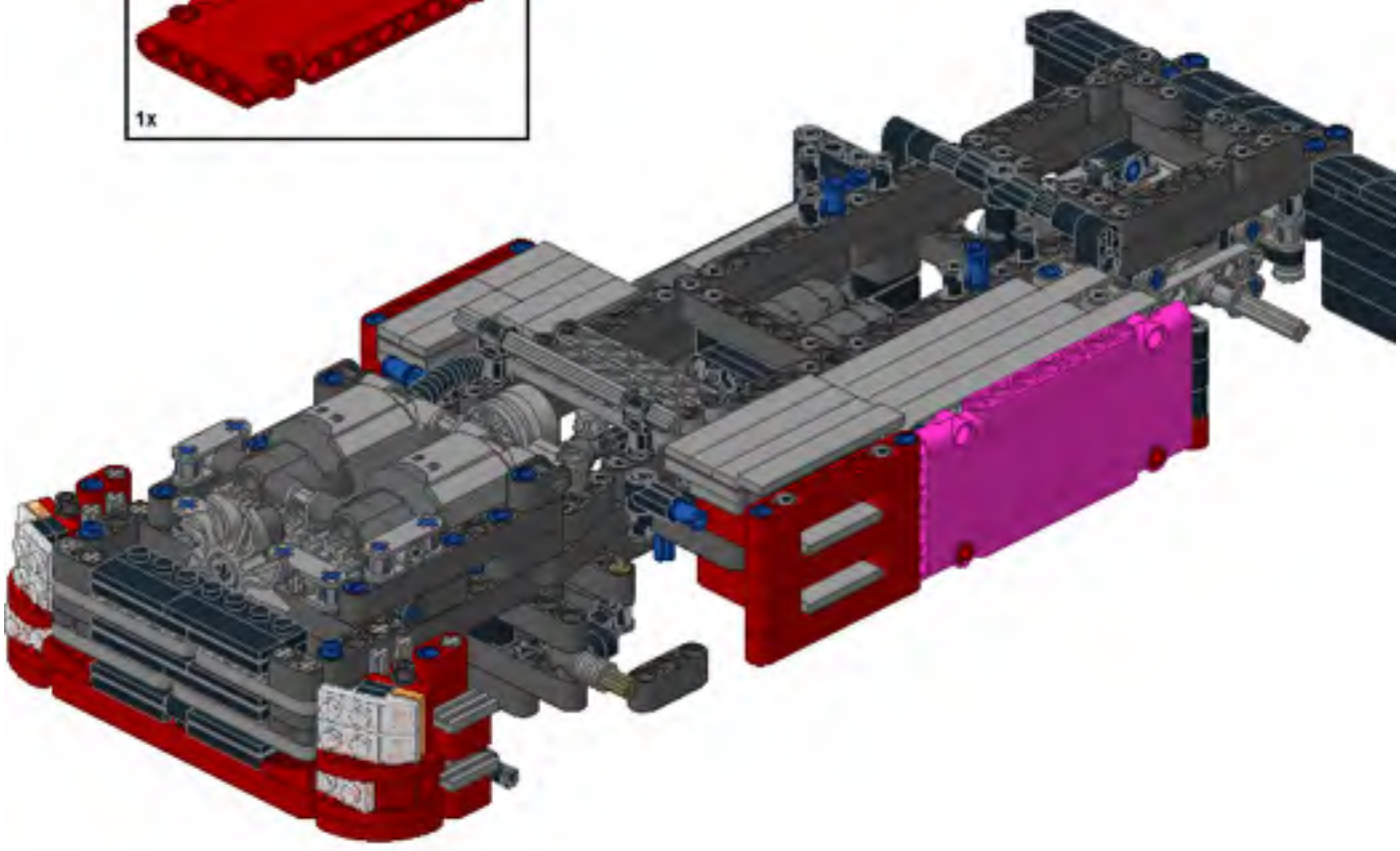

1

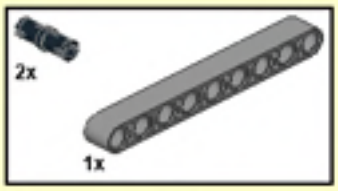

2

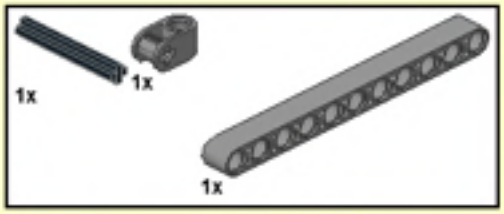

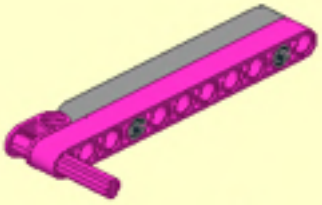

3

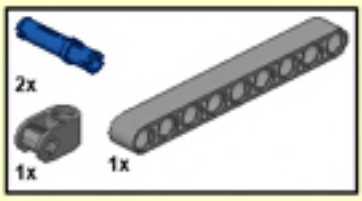

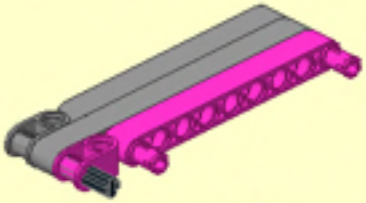

4

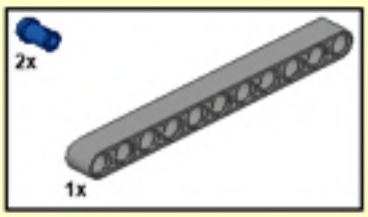

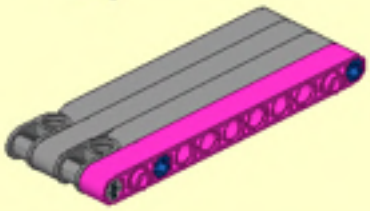

52

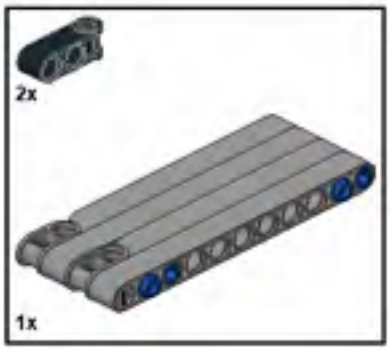

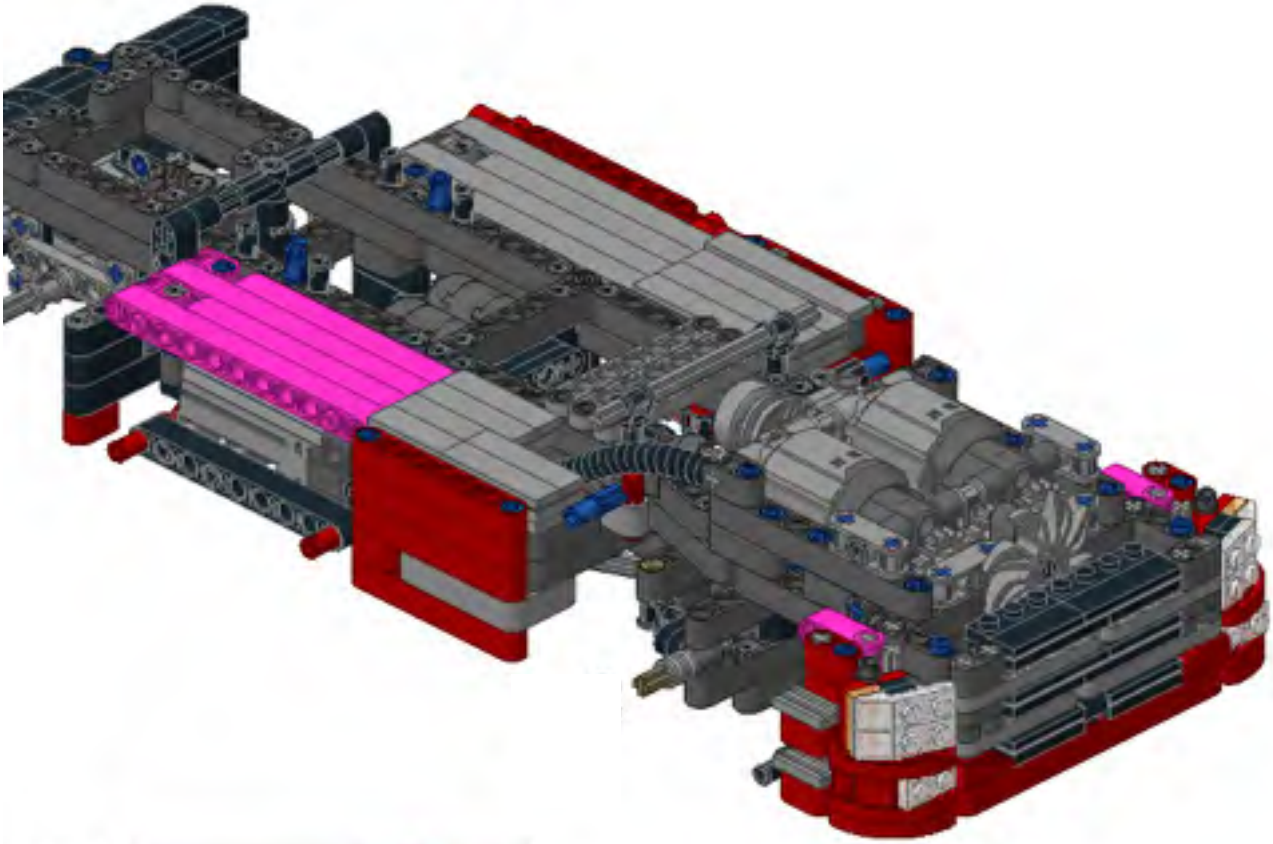

53

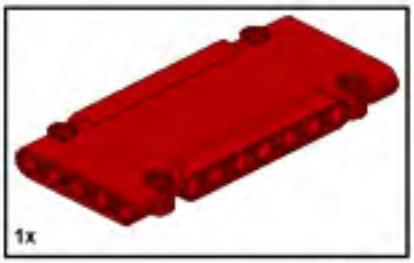

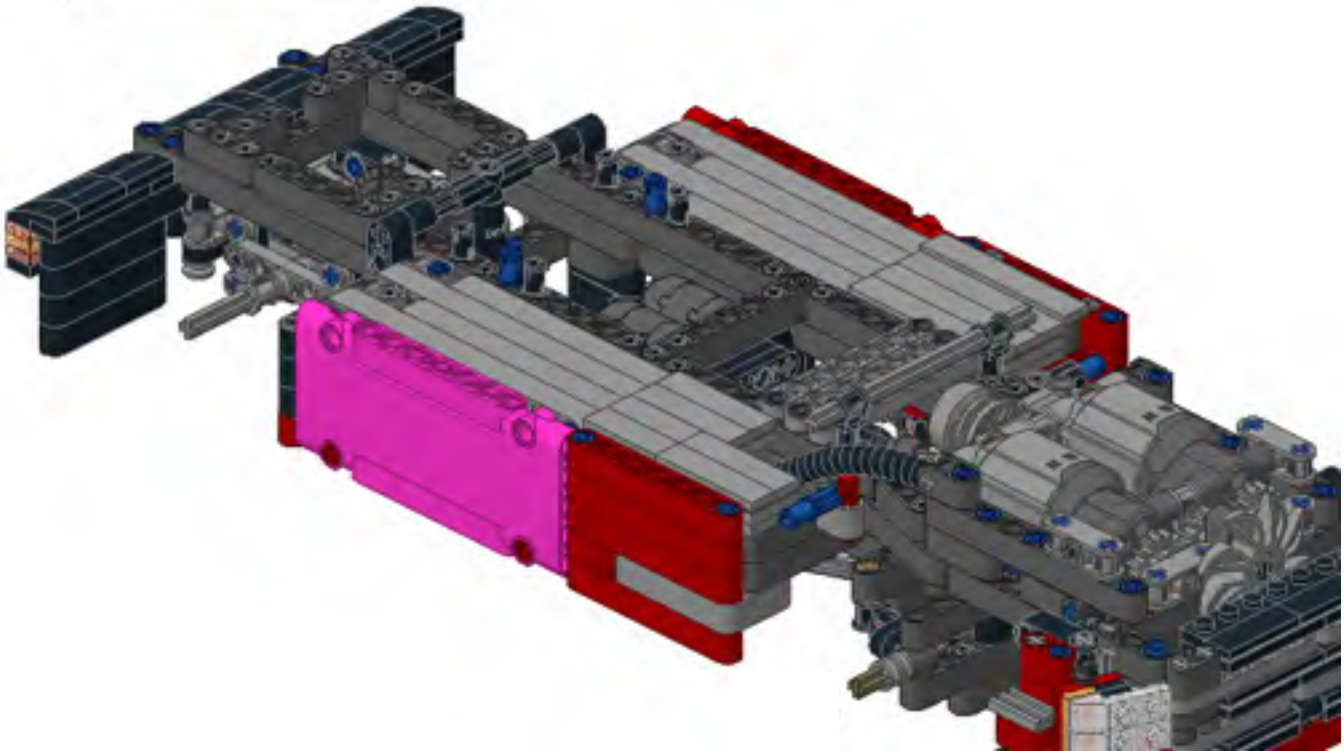

1

2

3

4

5

6

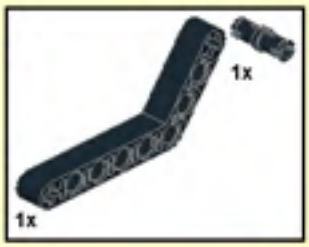

7

54

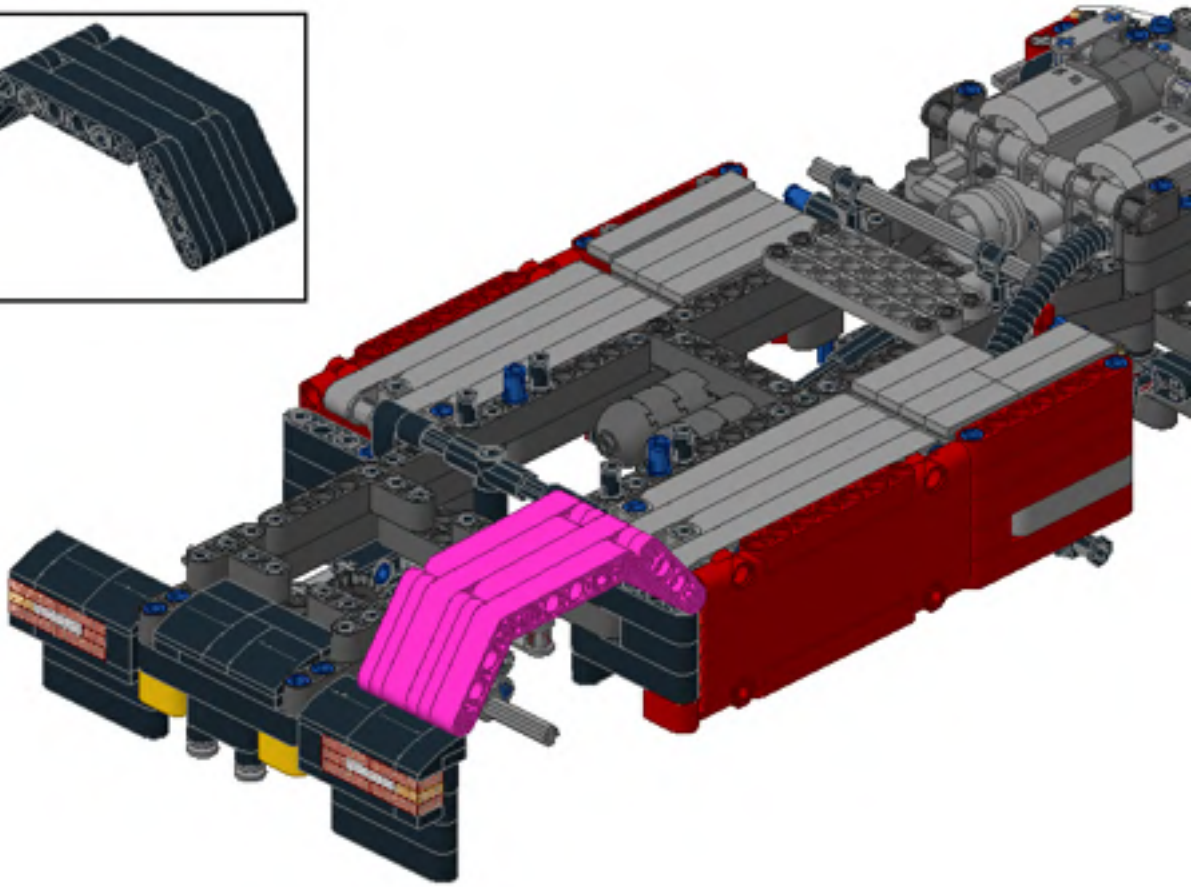

1

2

3

4

5

6

7

55

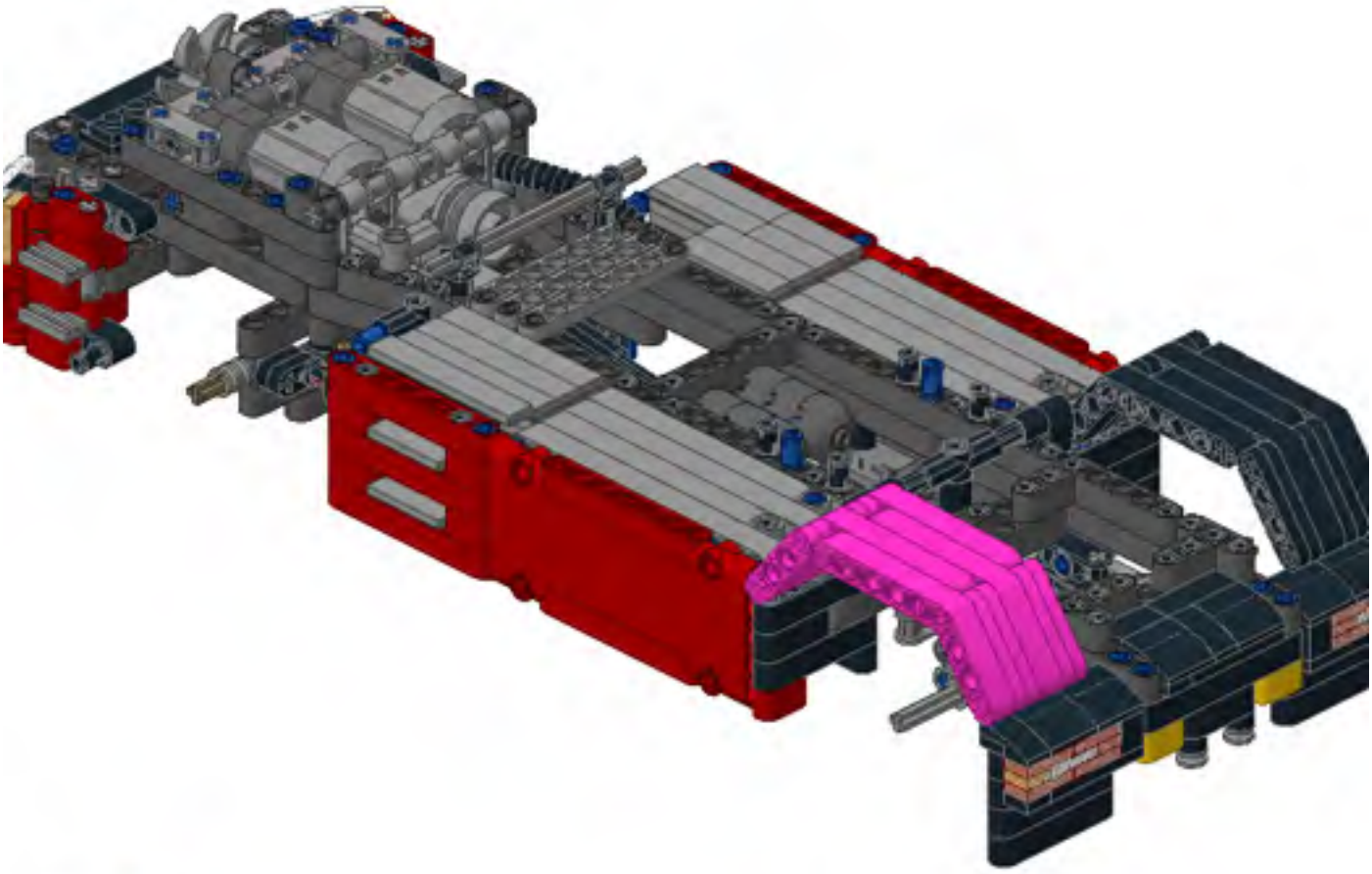

56

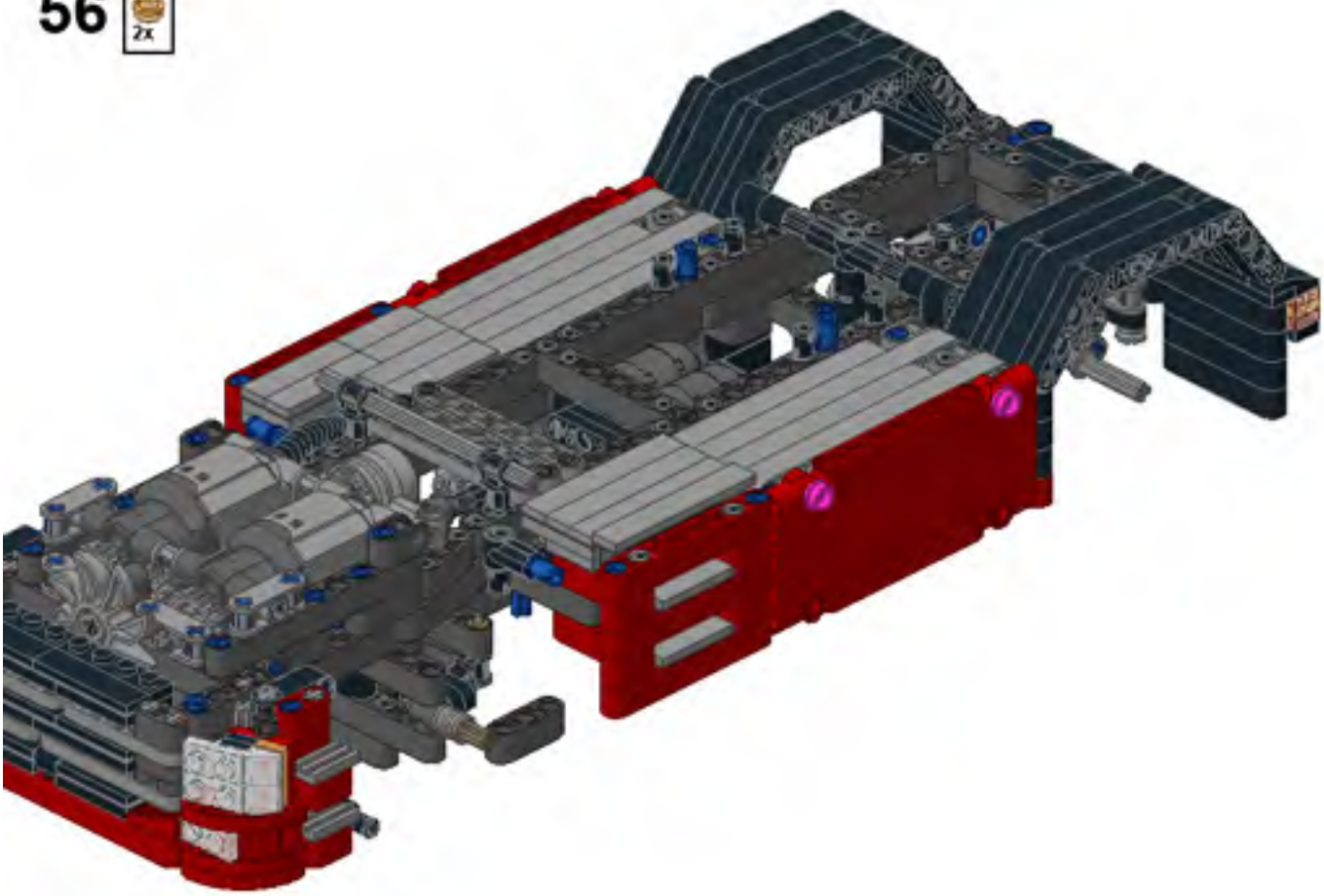

57

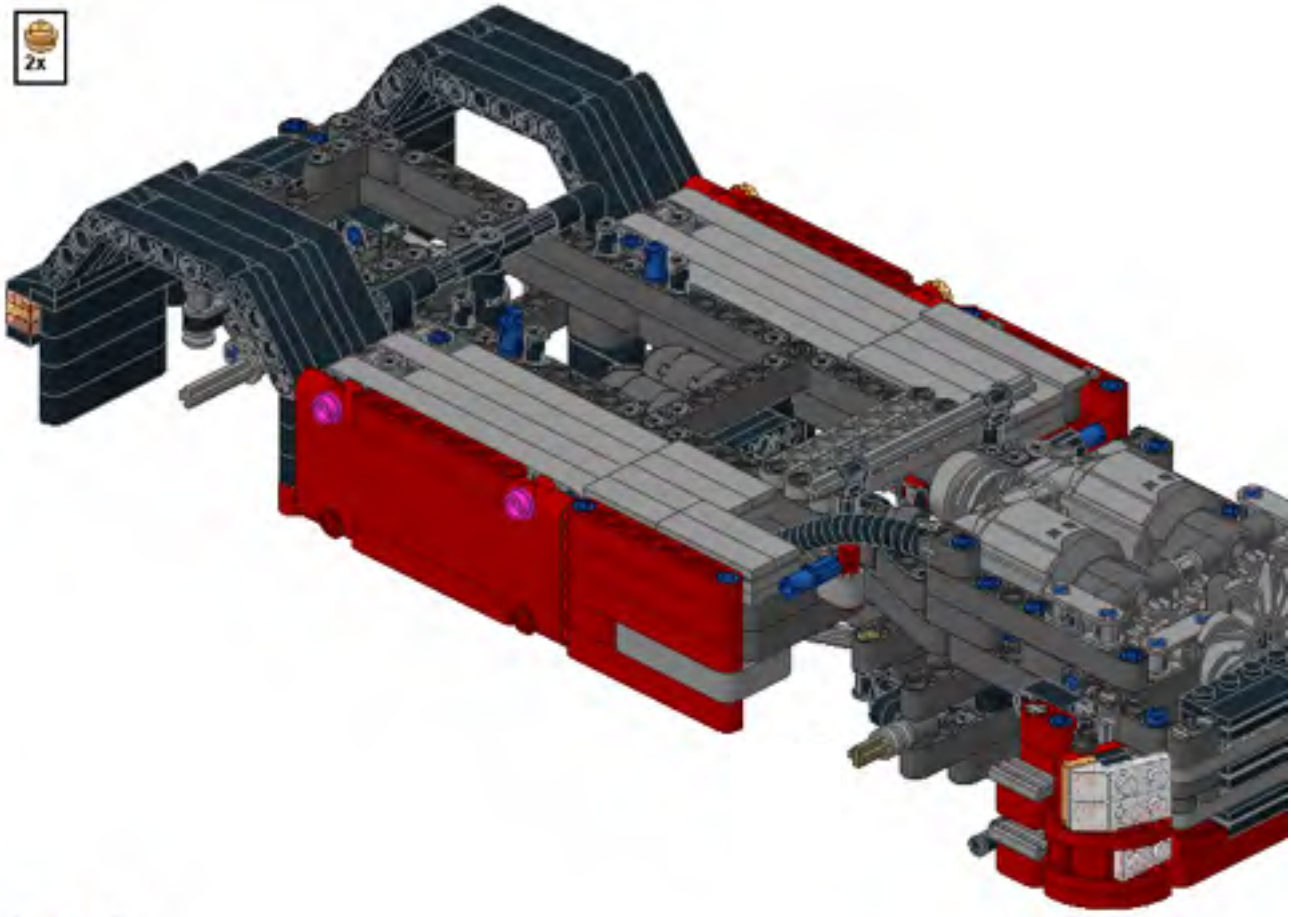

58

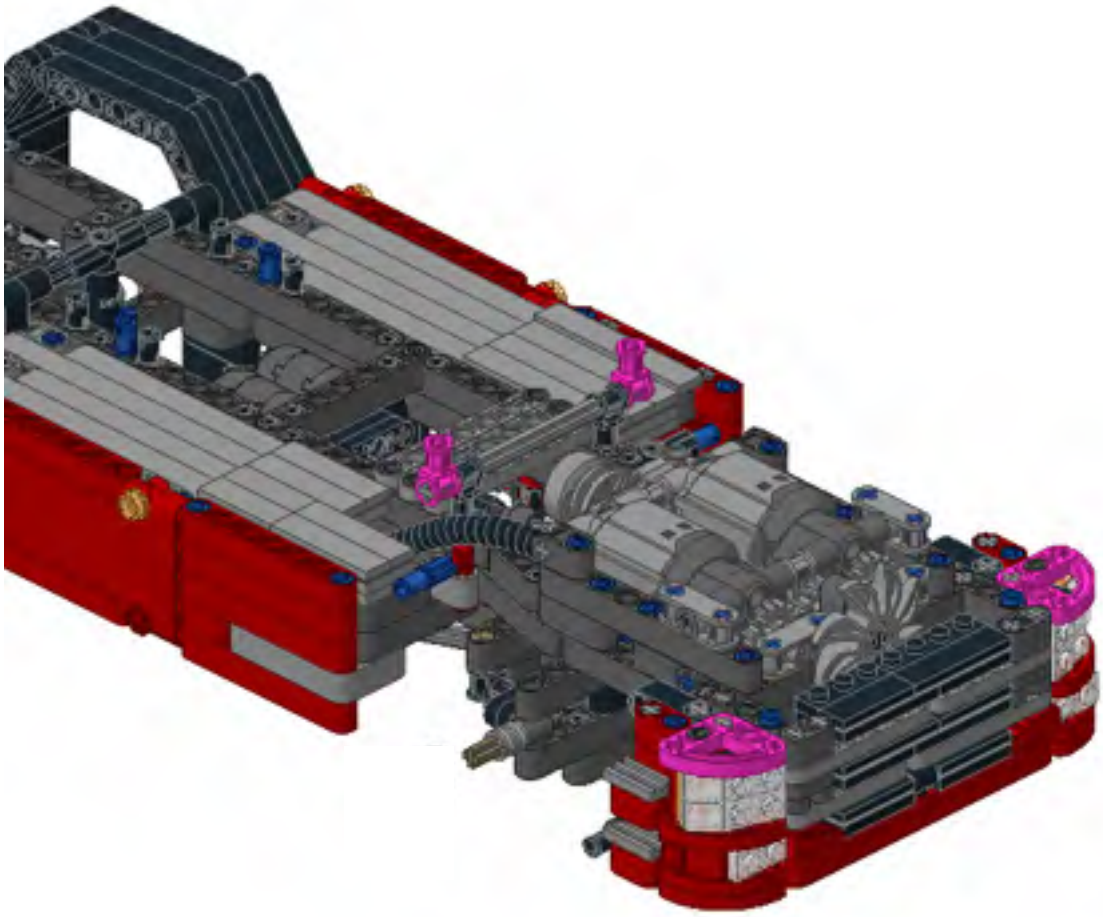

59

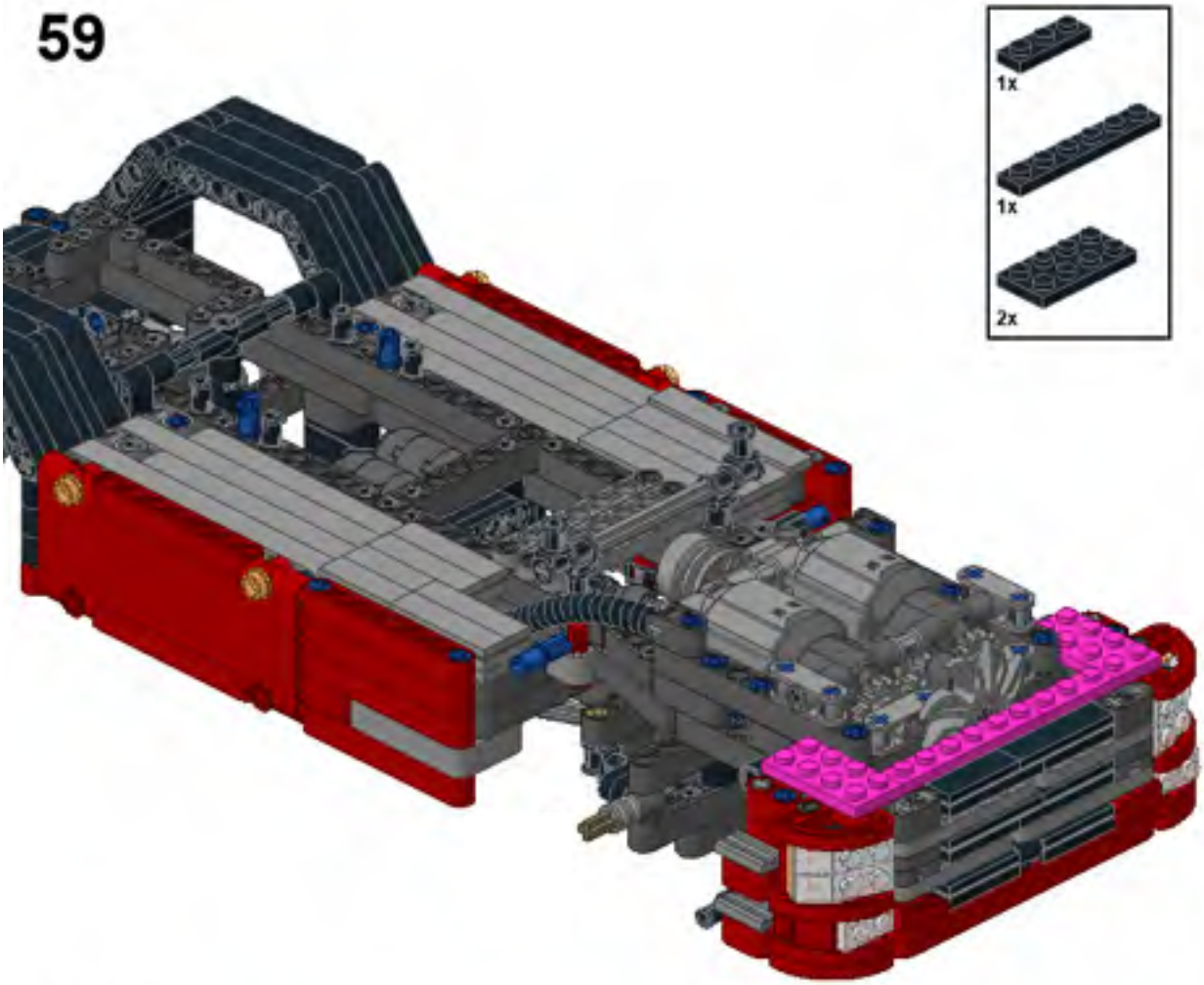

60

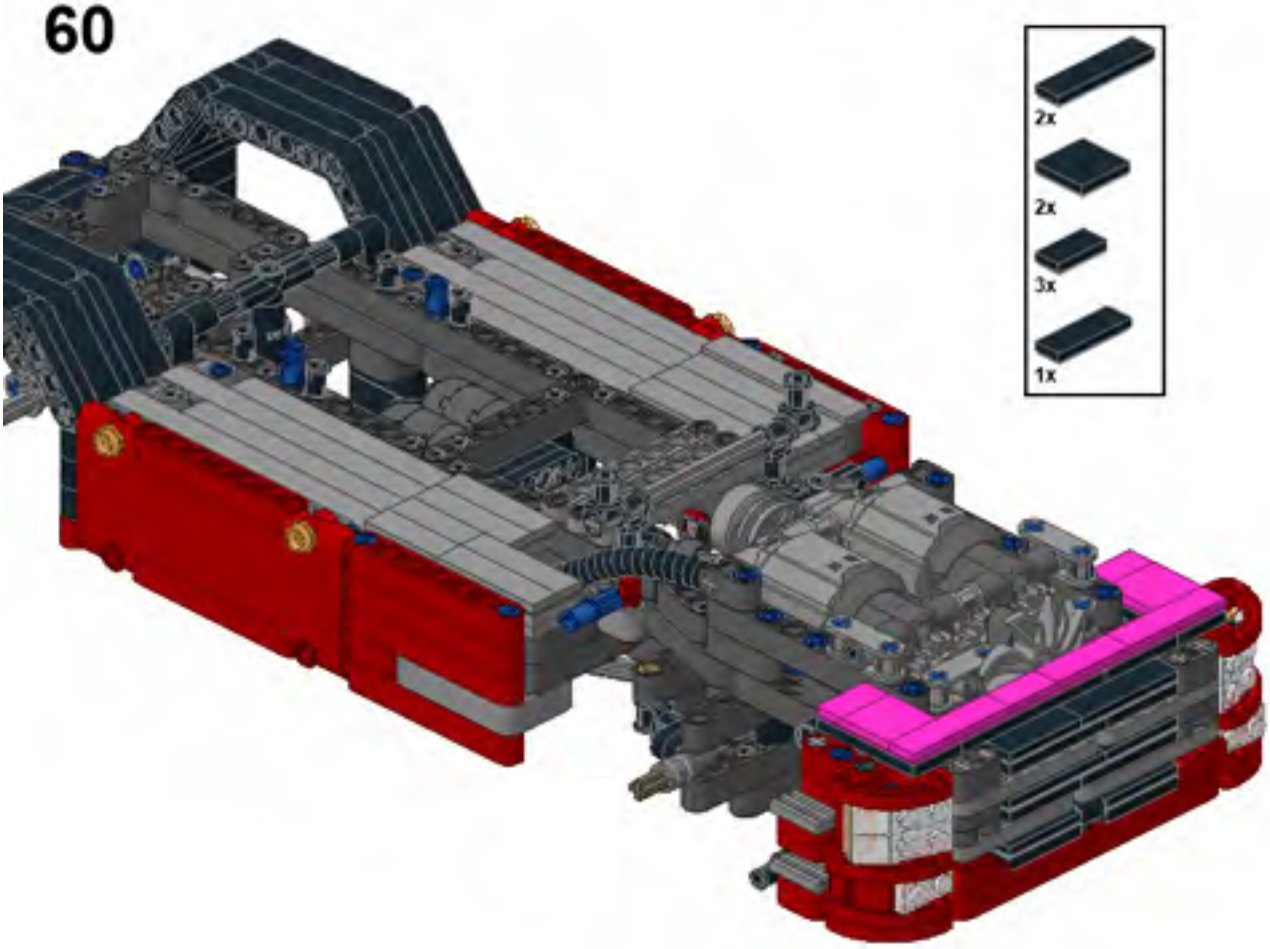

1

2

3

4

5

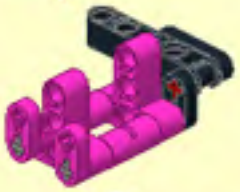

6

7

8

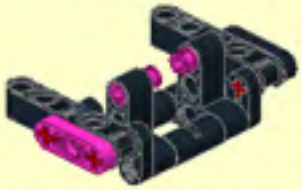

9

10

11

12

13

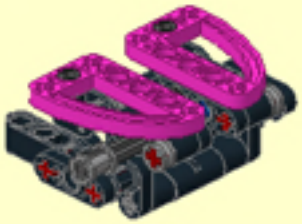

14

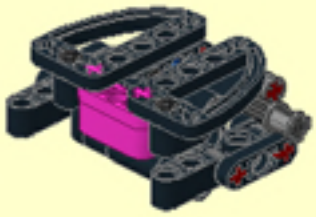

61

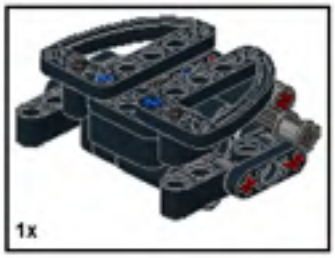

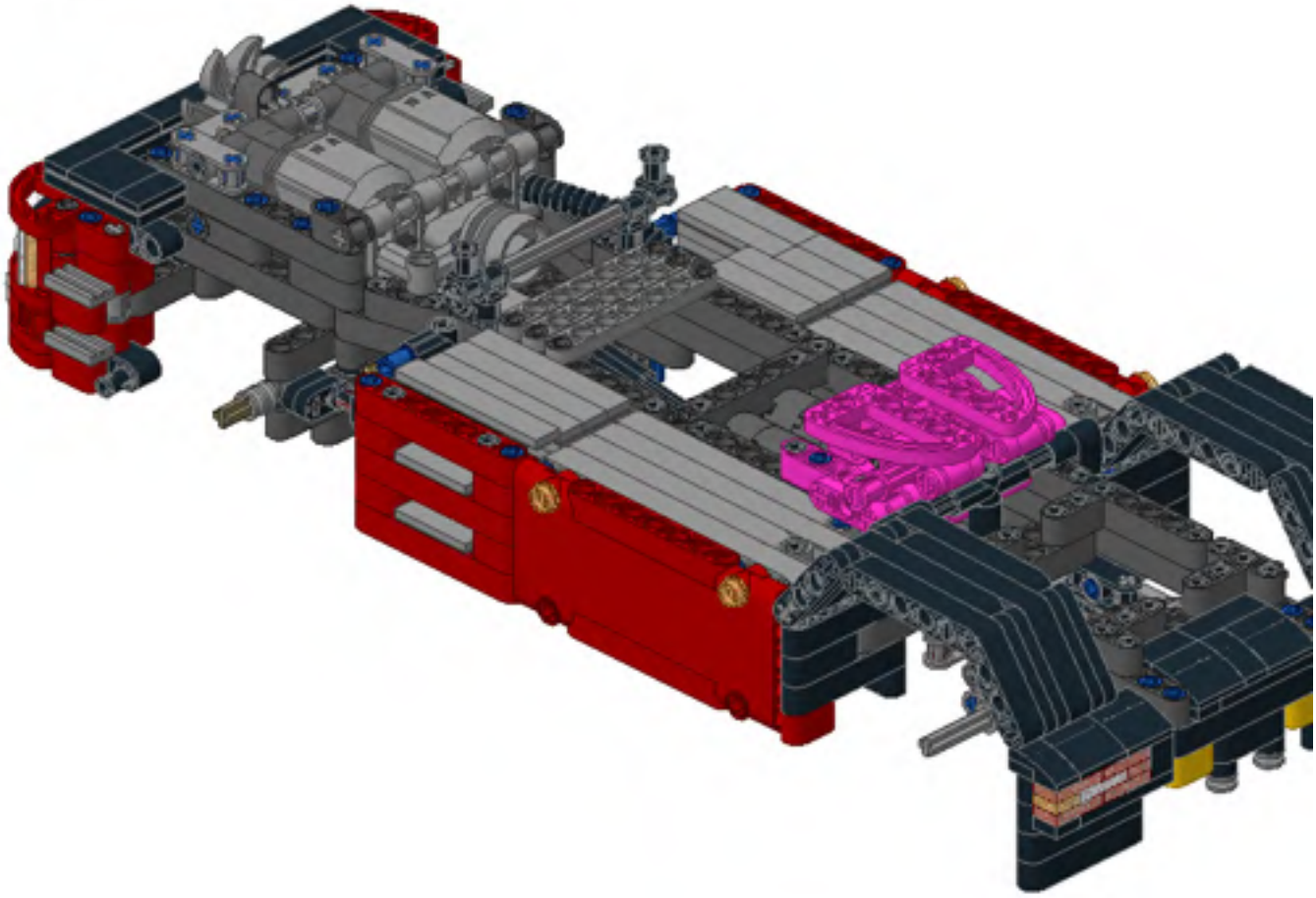

1

2

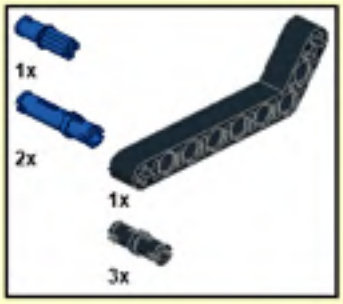

3

4

5

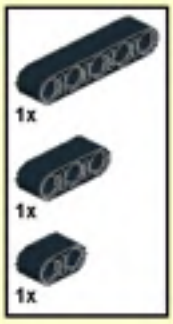

6

62

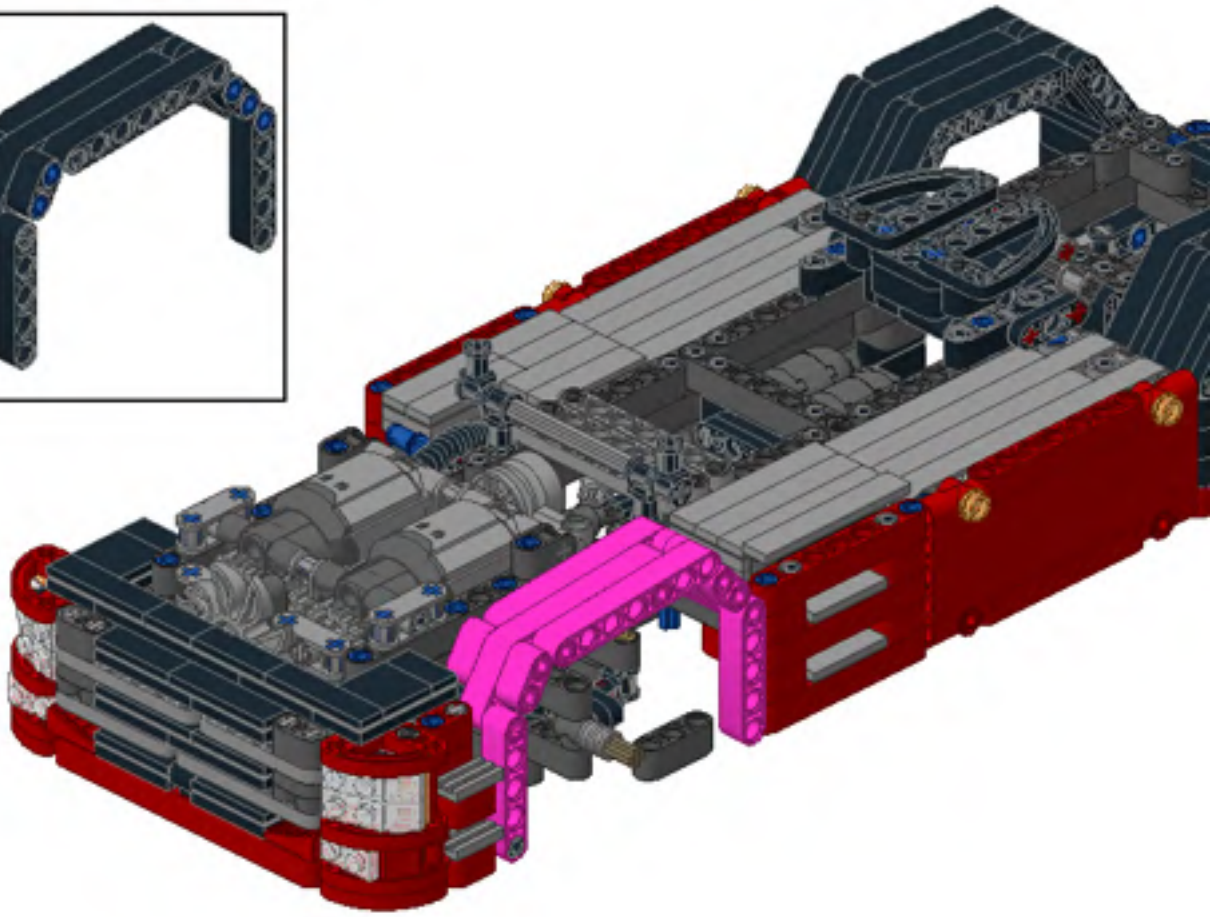

1

2

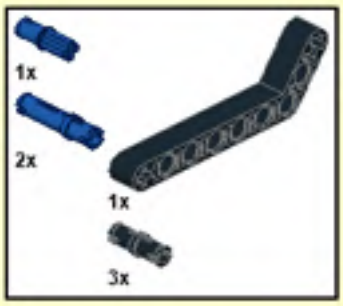

3

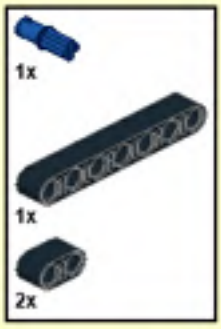

4

5

6

63

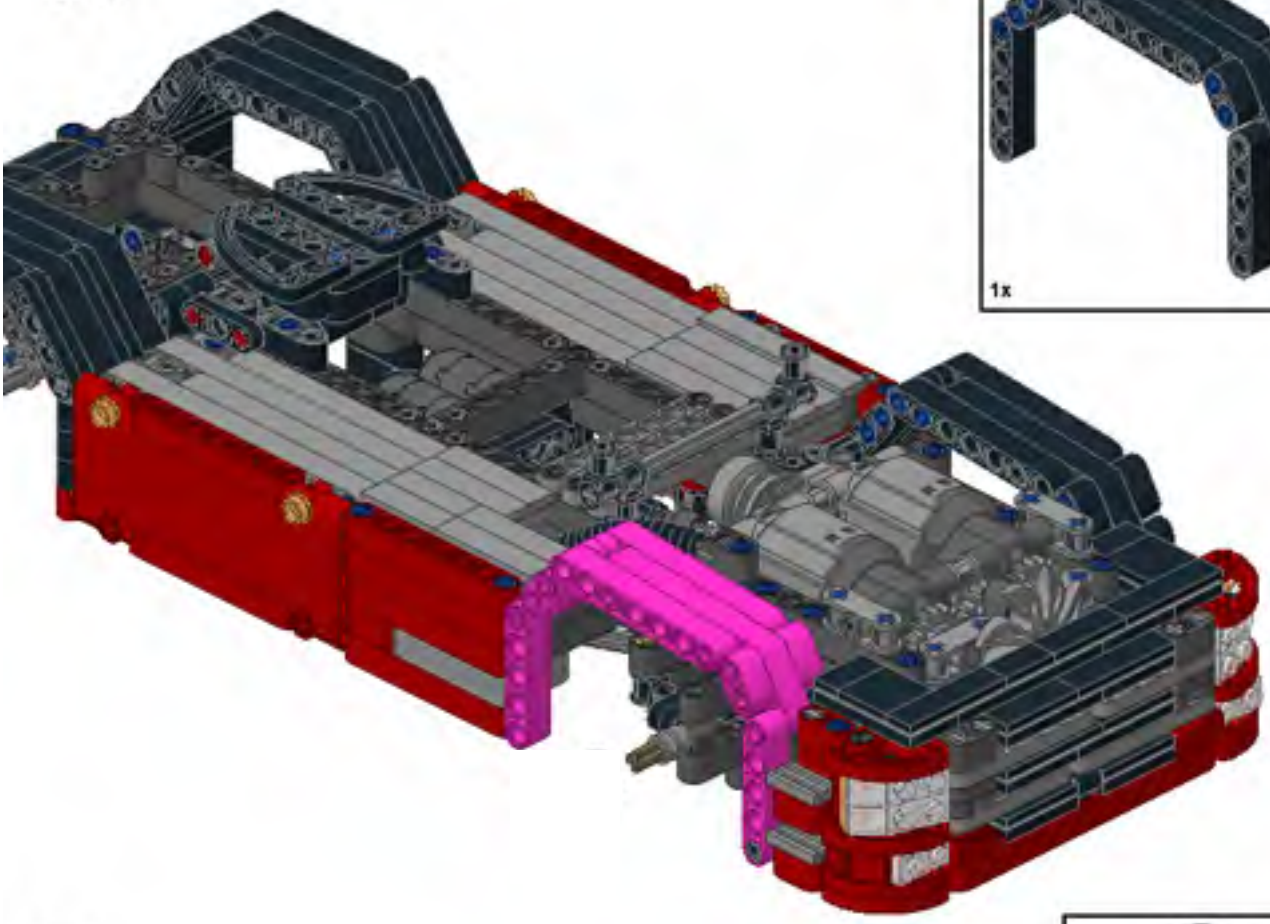

64

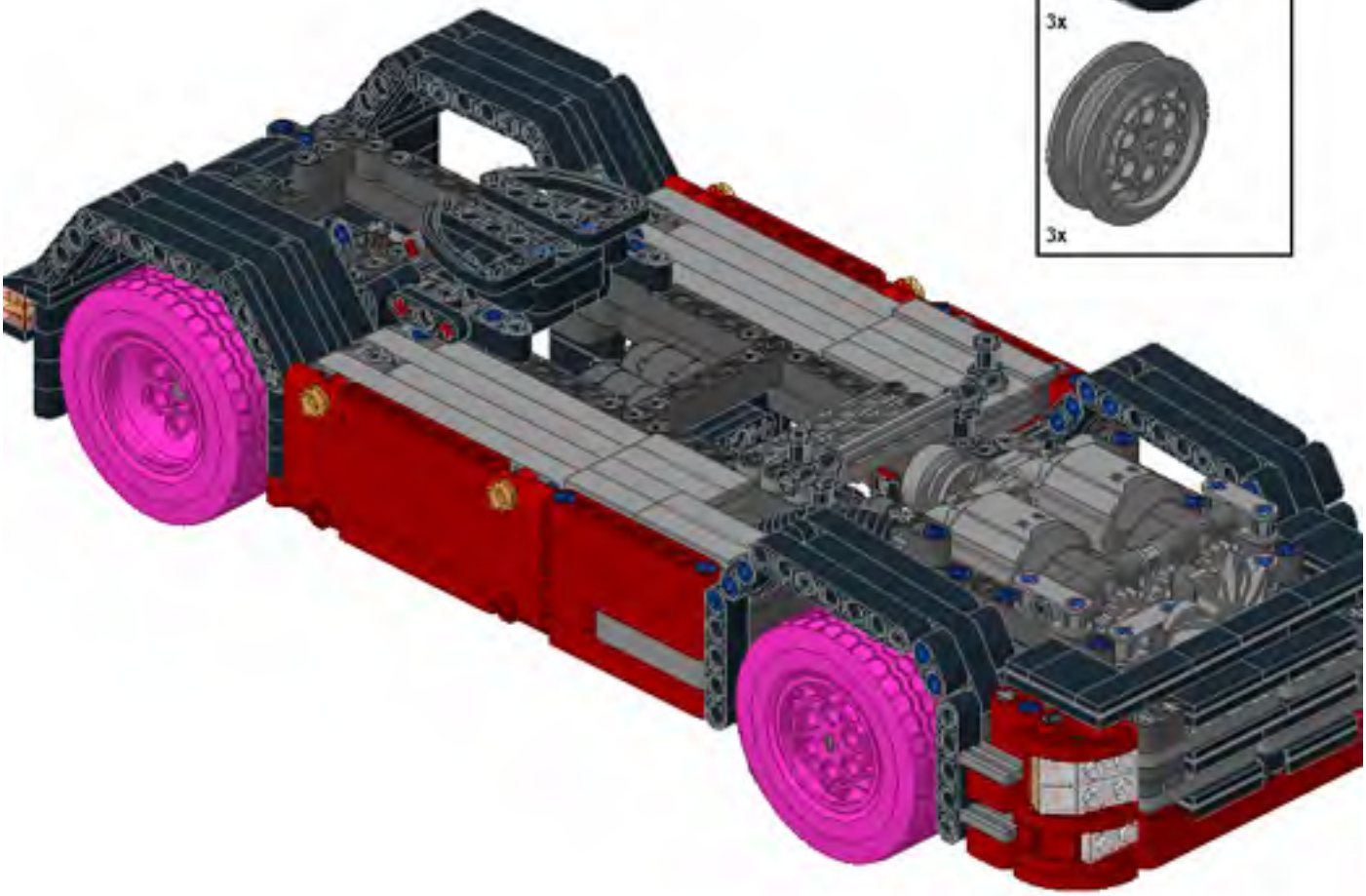

65

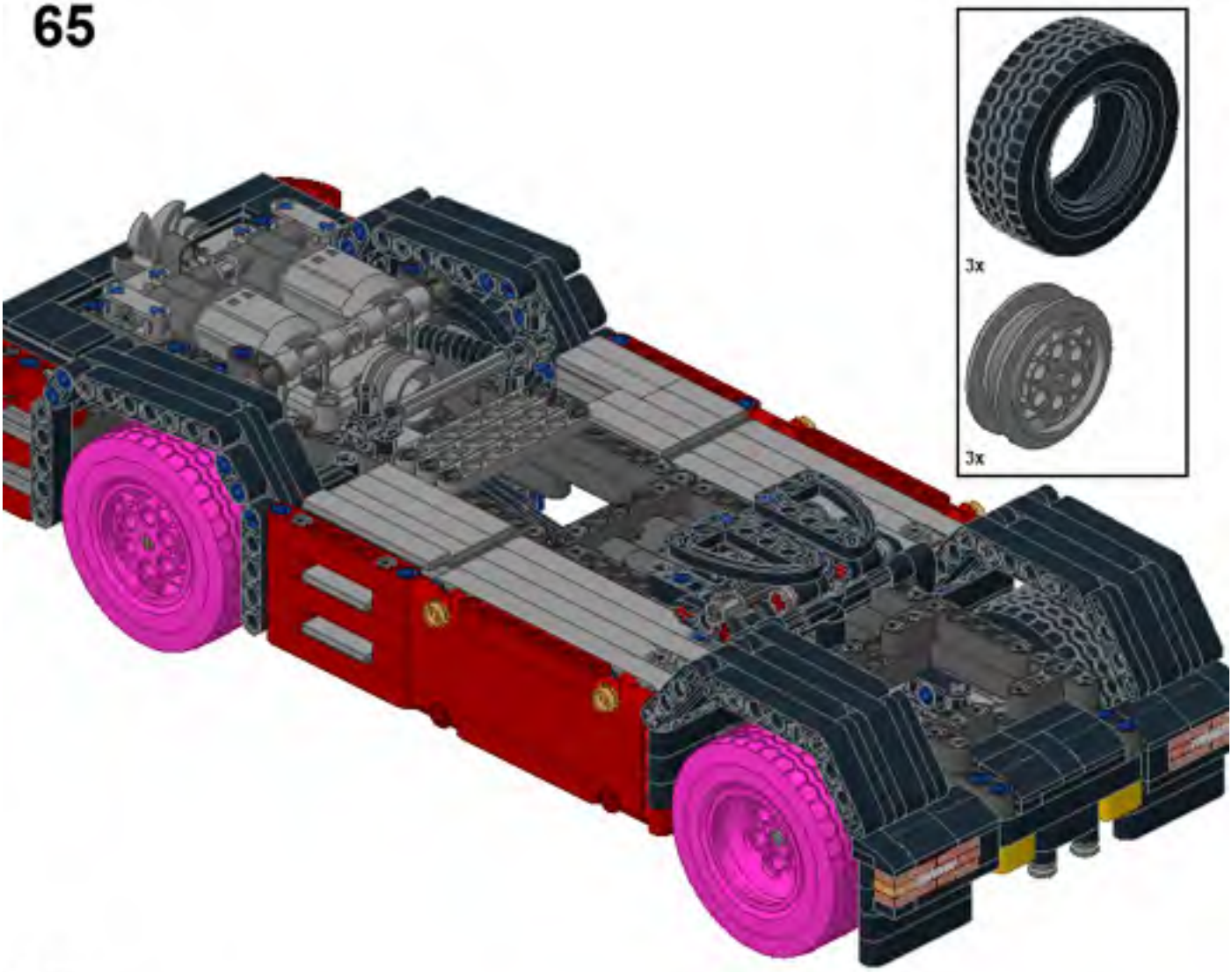

66

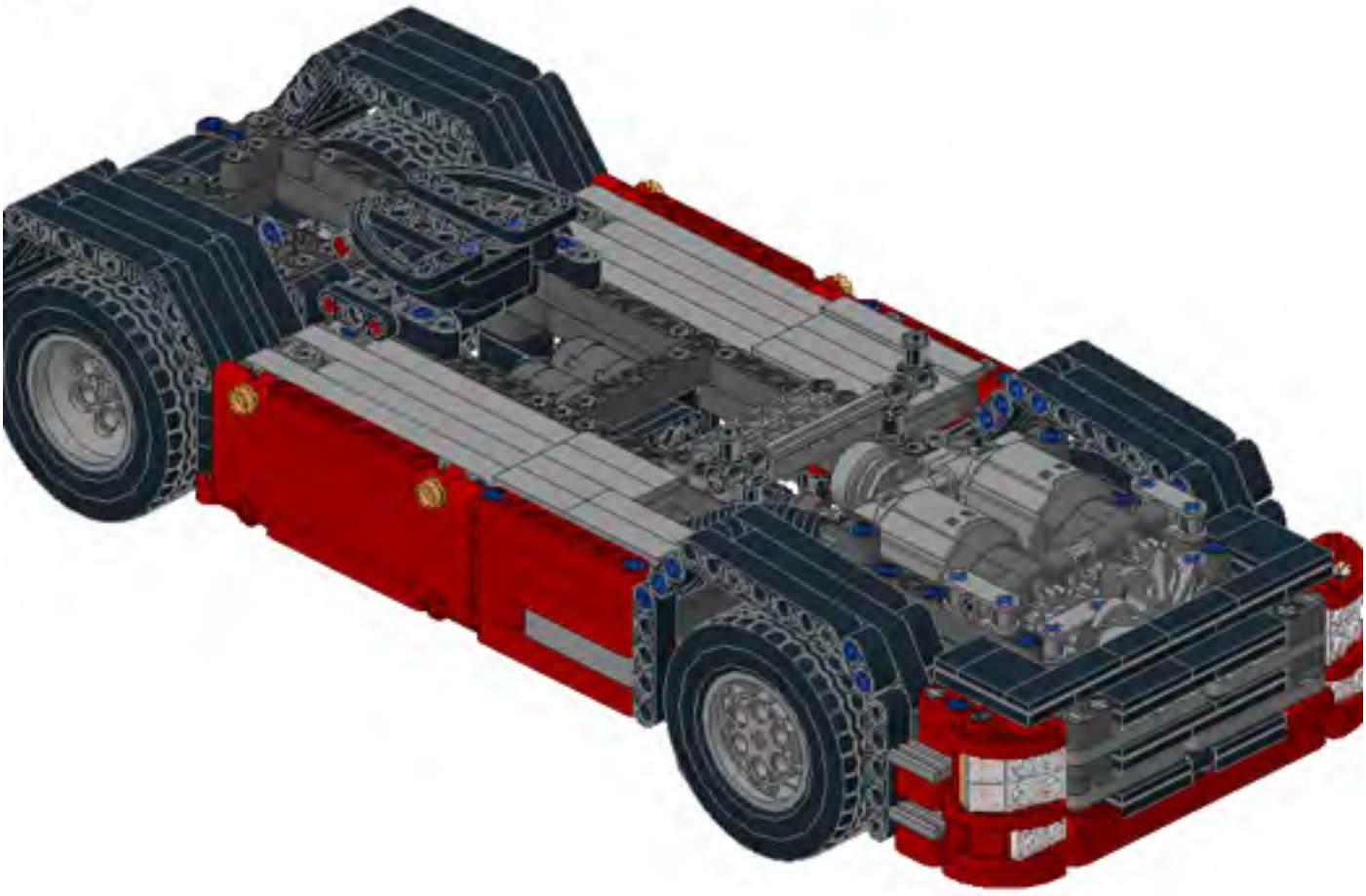

PART 2

1

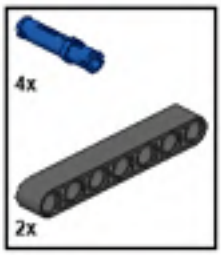

2

3

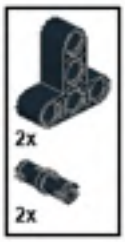

4

5

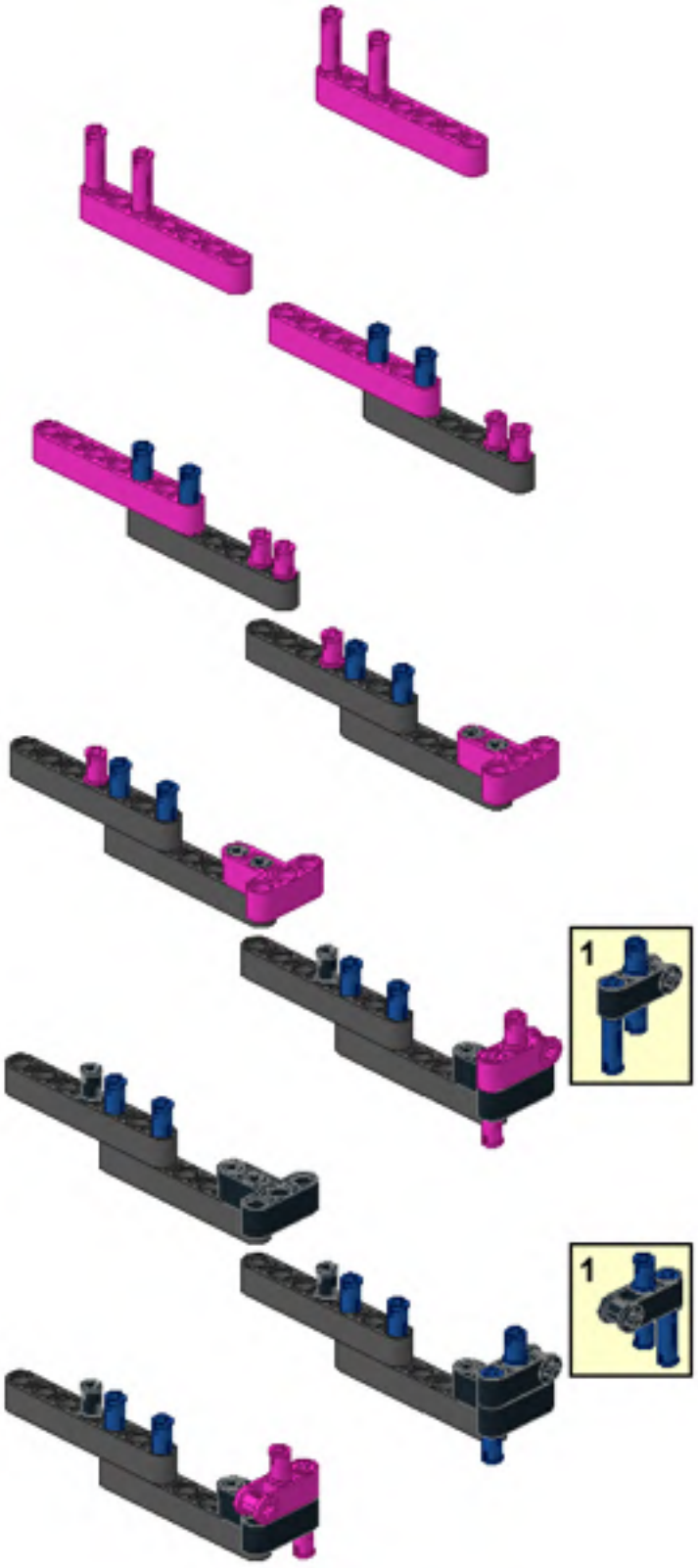

6

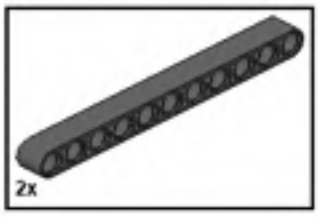

7

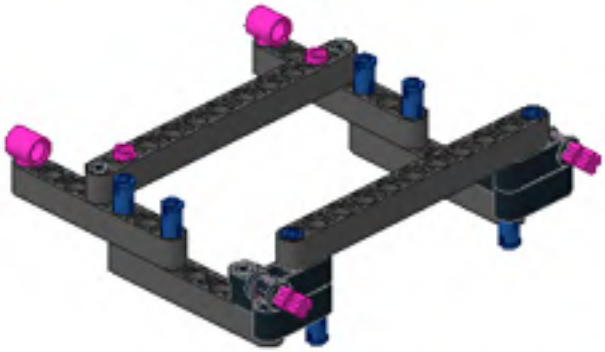

8

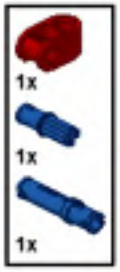

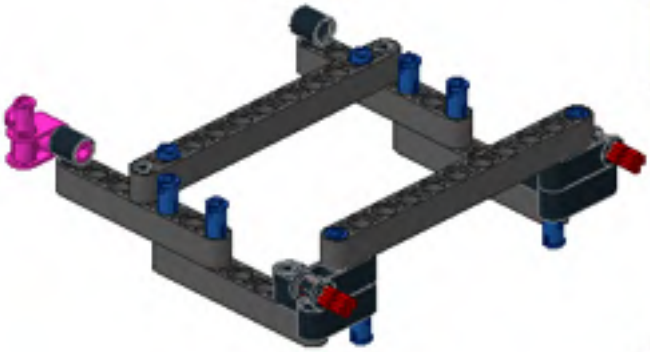

9

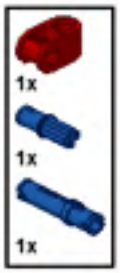

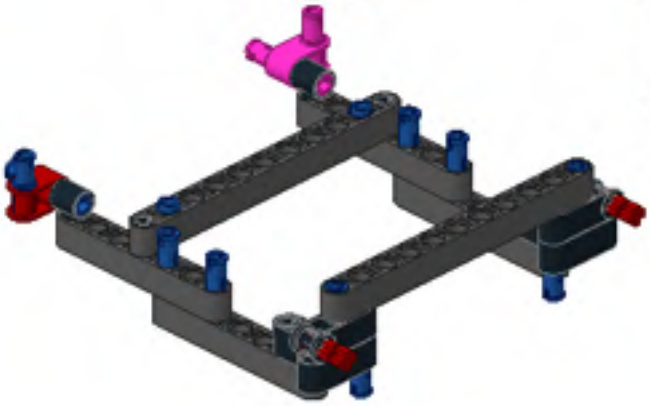

10

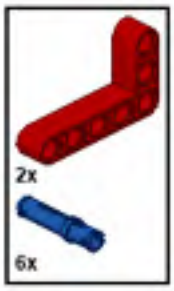

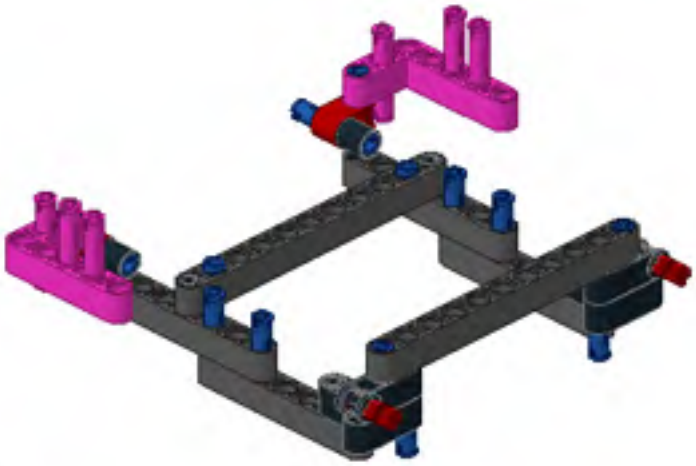

11

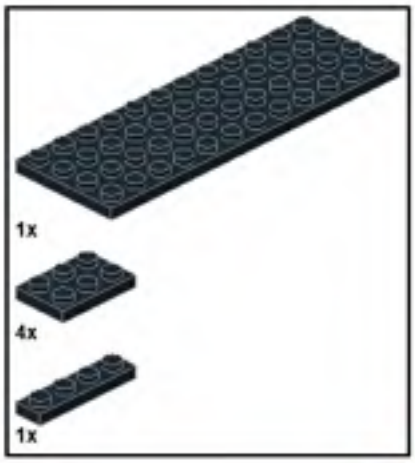

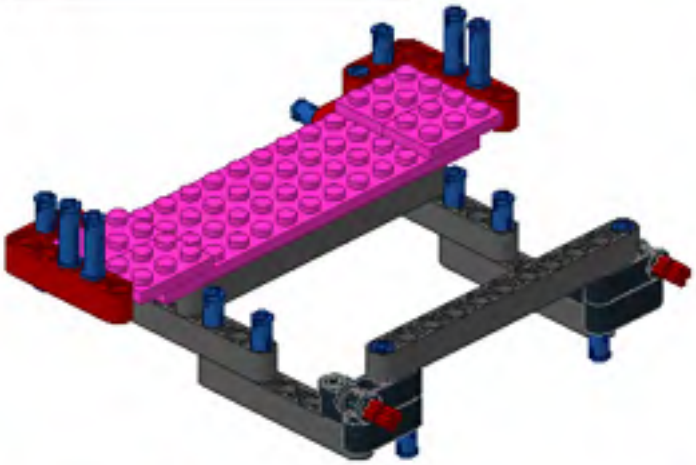

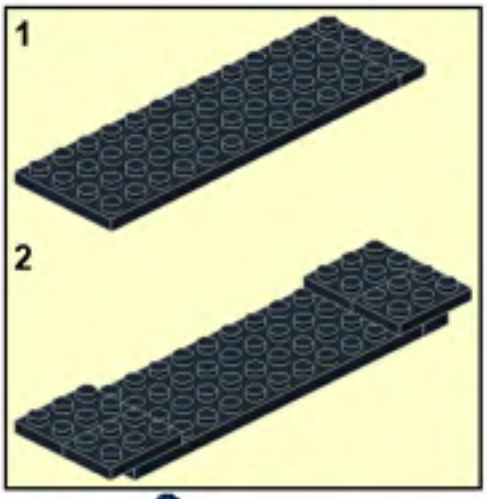

12

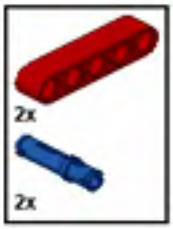

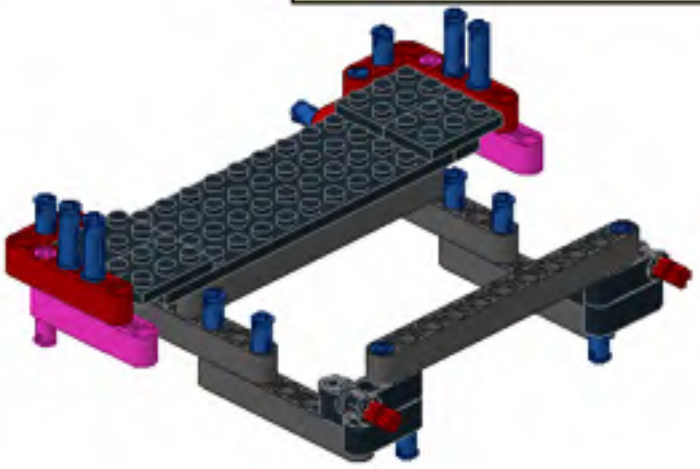

13

4x

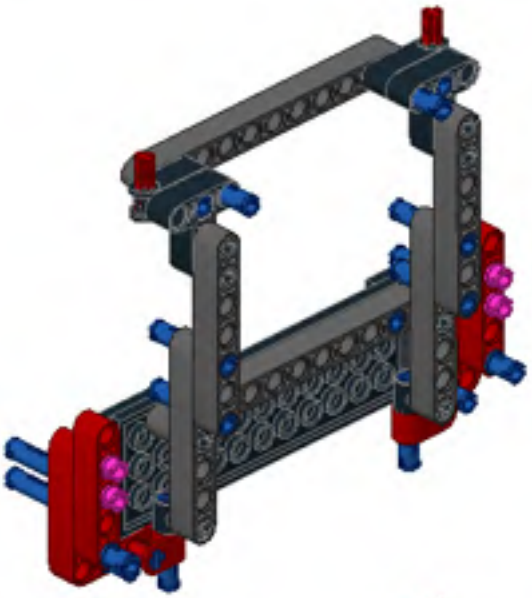

14

2x

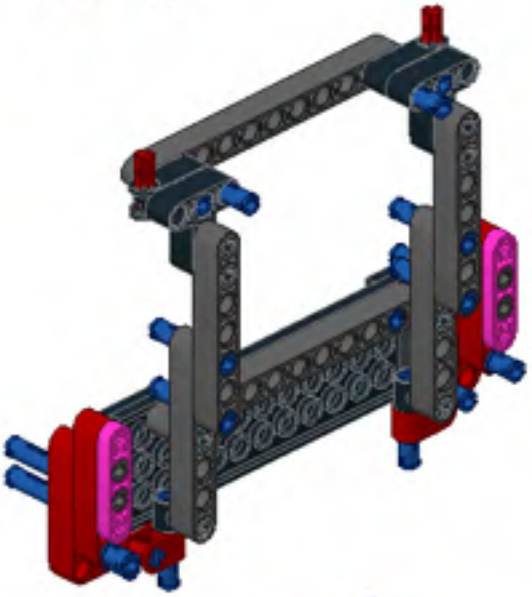

15

1x

1x

1x

1x

1x

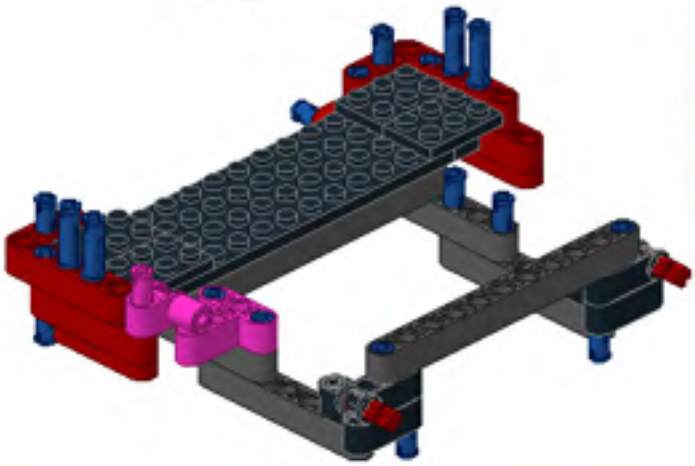

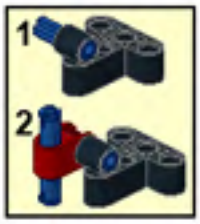

16

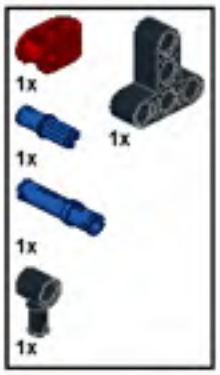

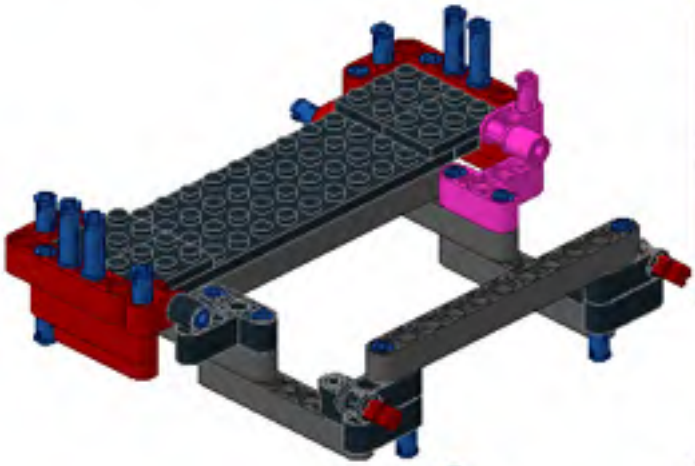

17

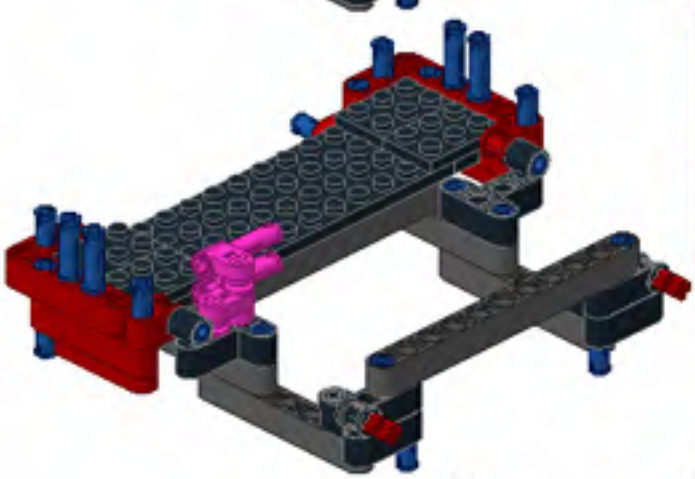

18

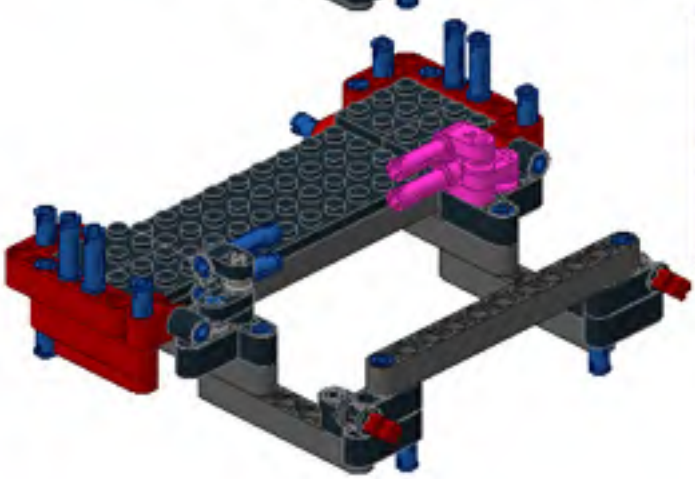

19

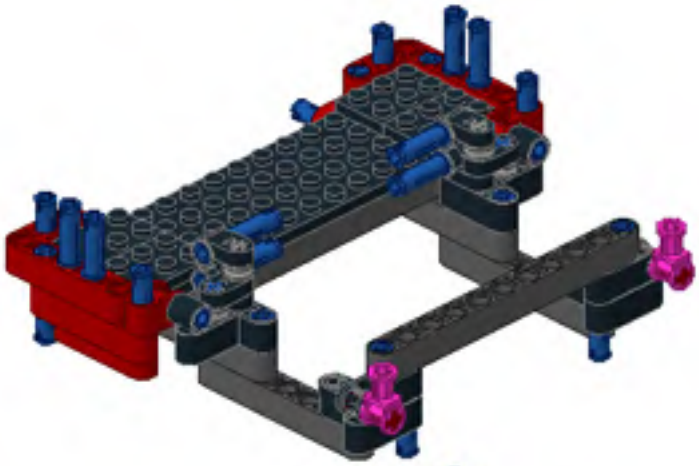

20

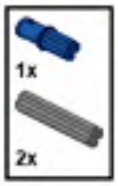

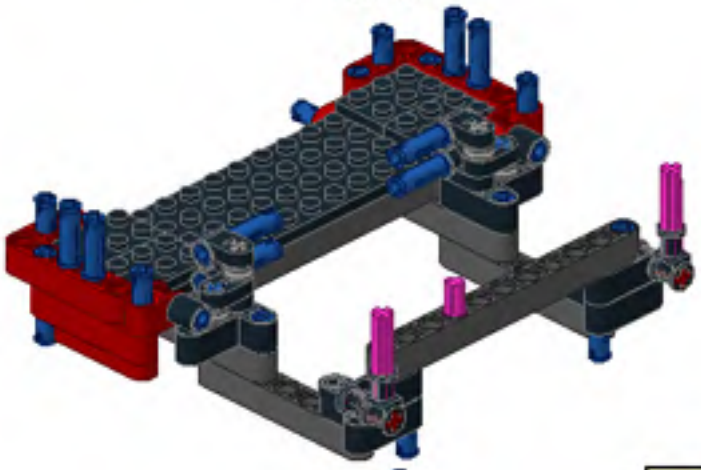

21

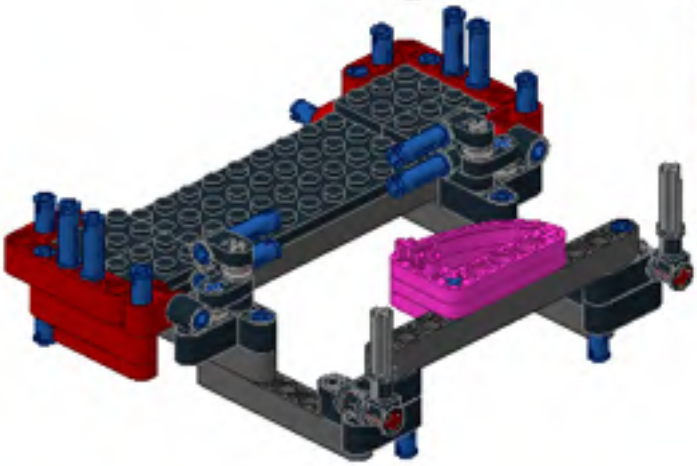

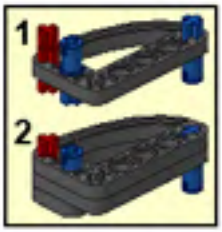

22

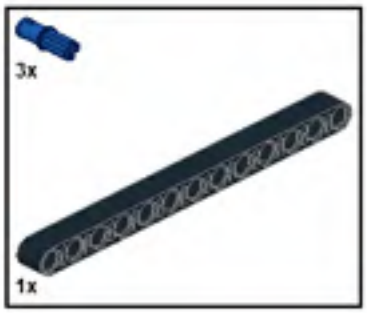

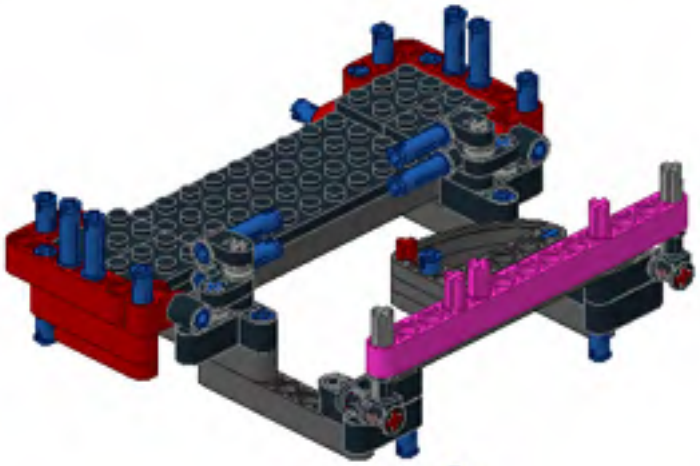

23

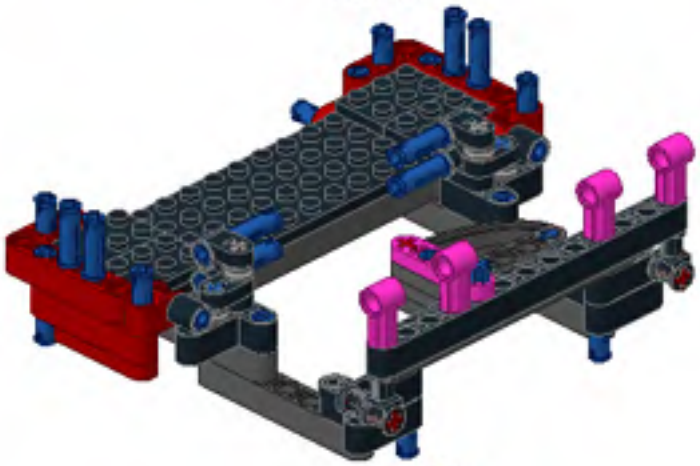

24

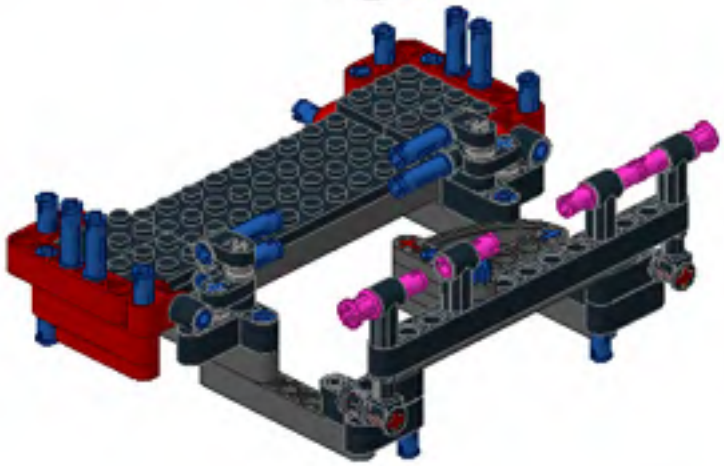

25

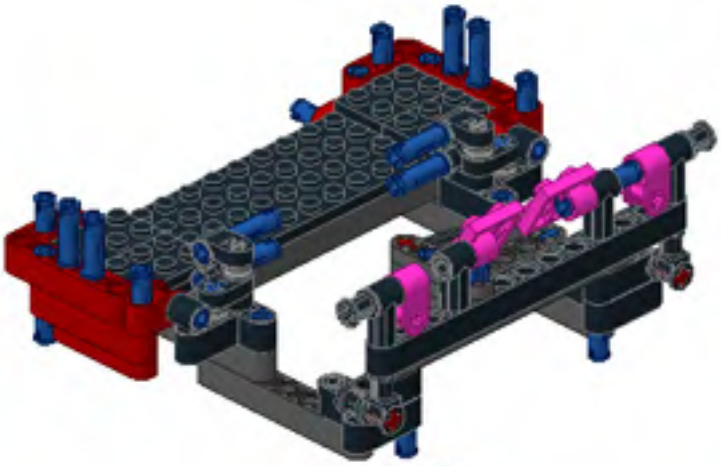

26

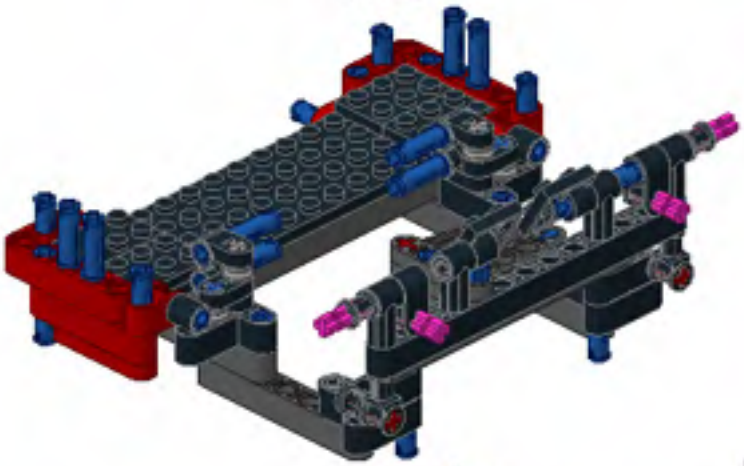

27

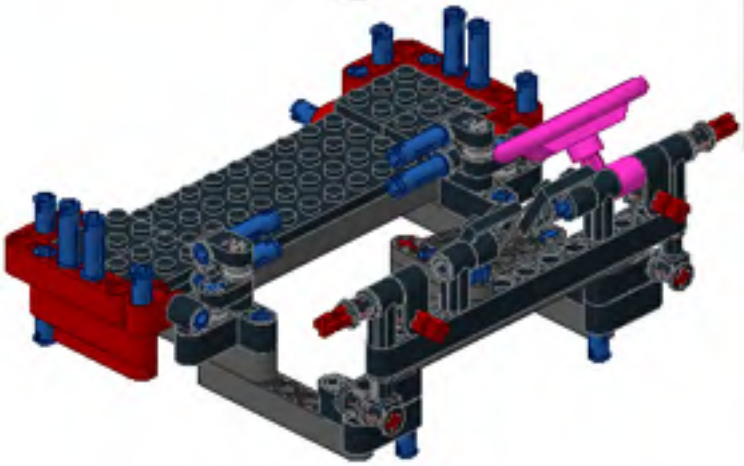

1

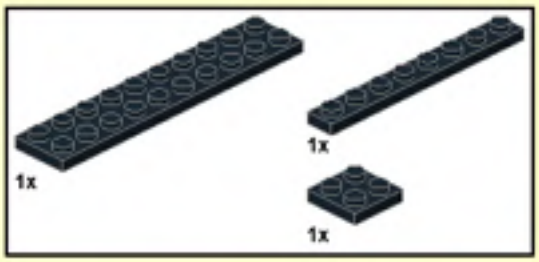

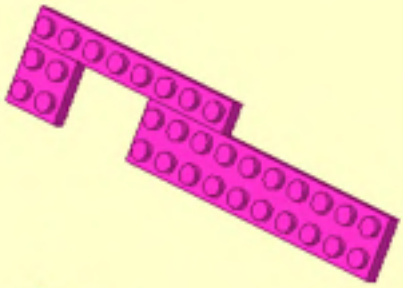

2

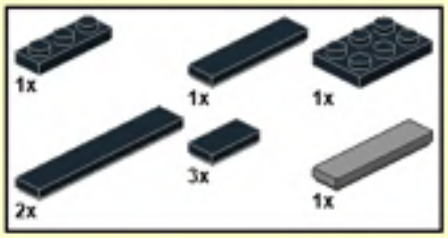

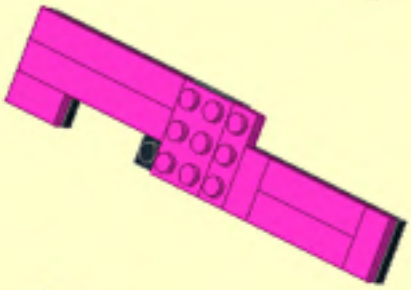

3

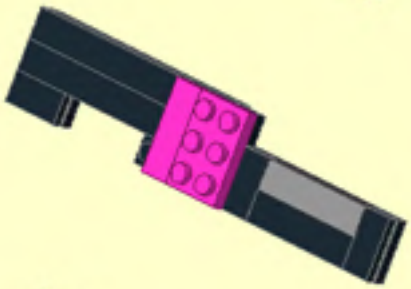

4

5

28

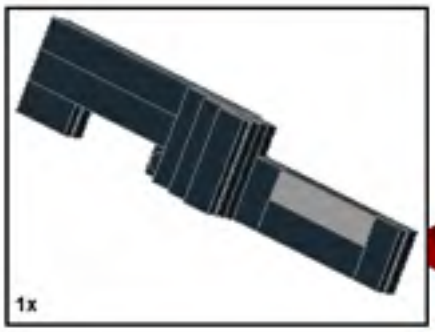

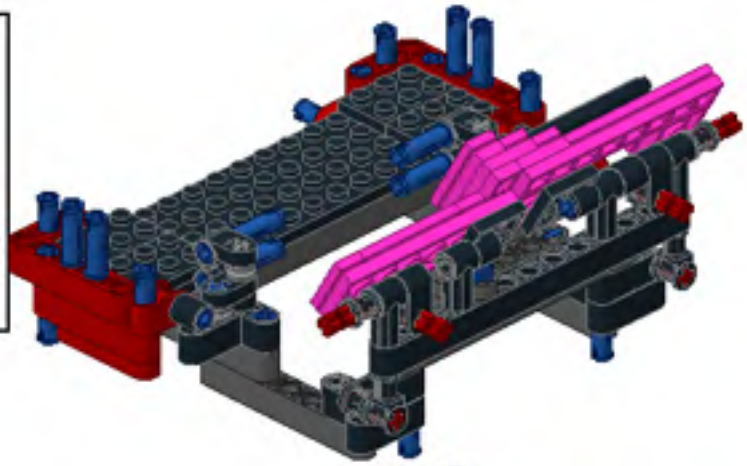

29

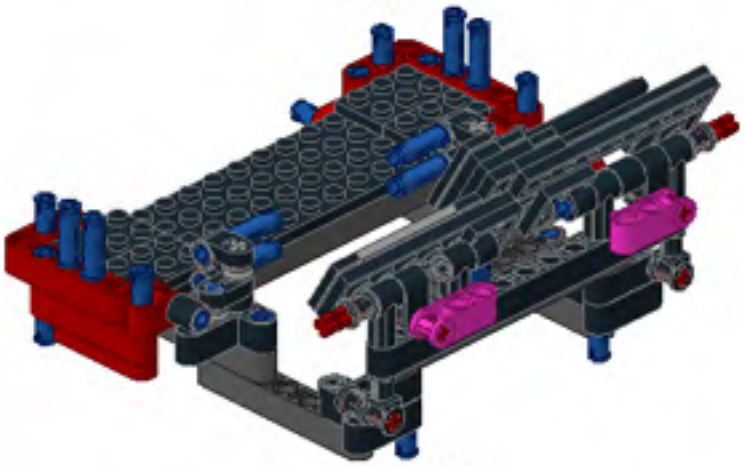

30

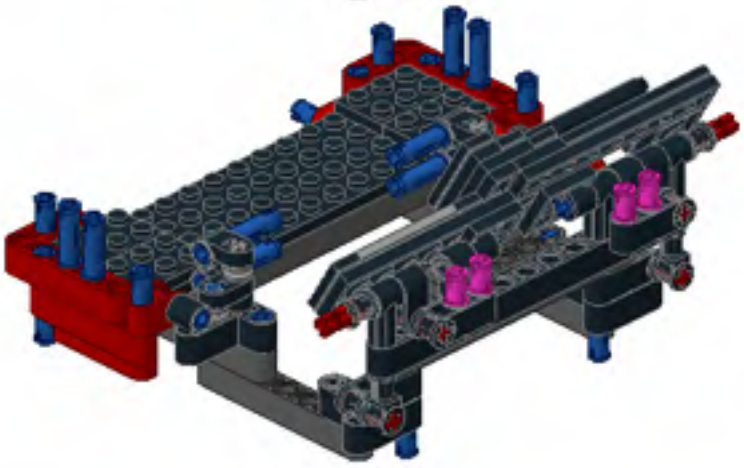

31

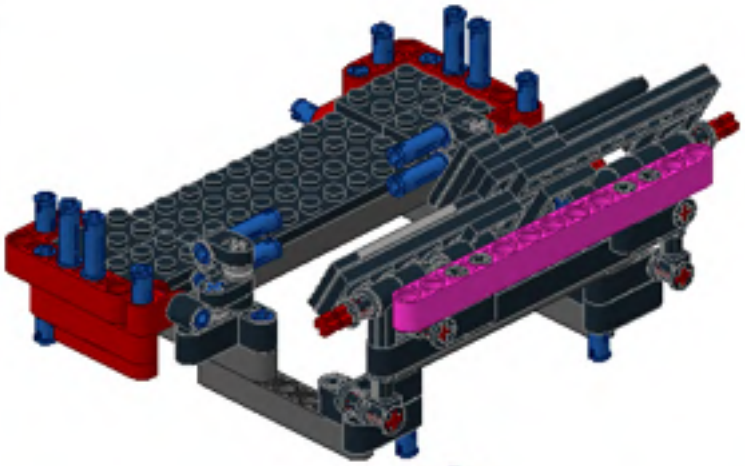

32

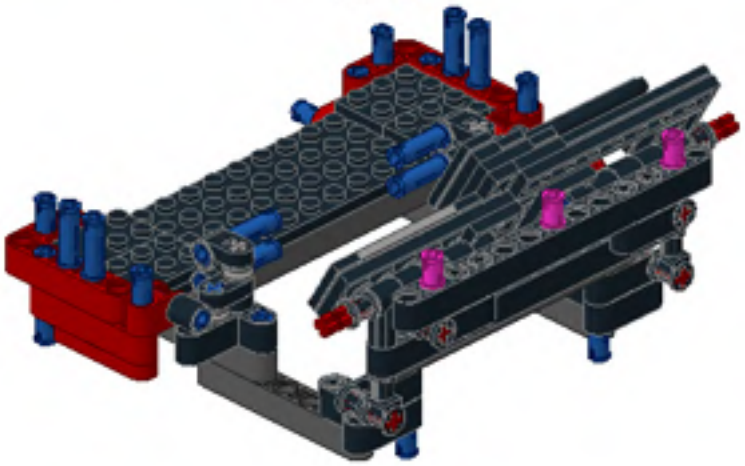

1

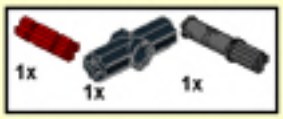

2

3

4

5

6

33

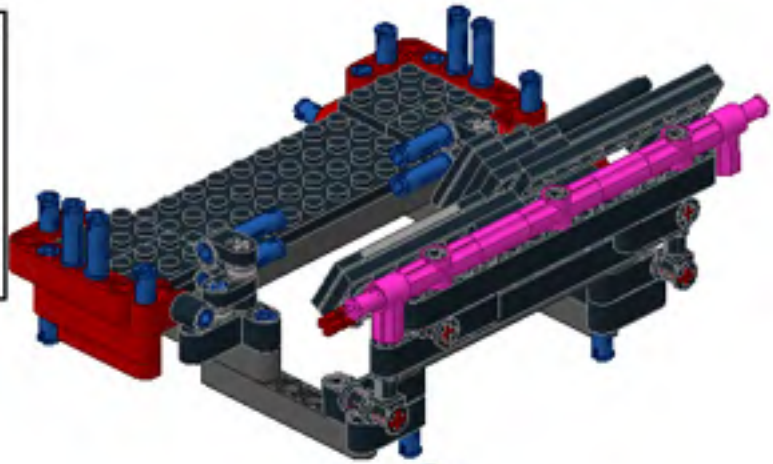

34

35

1

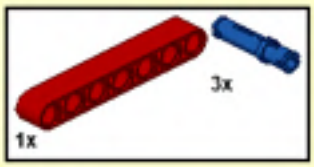

2

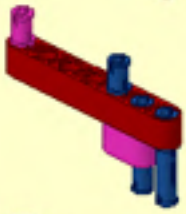

3

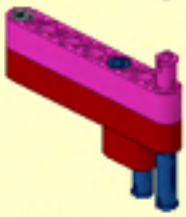

4

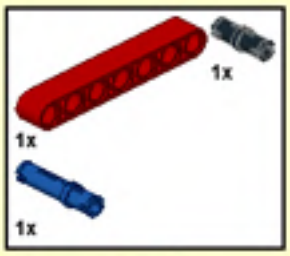

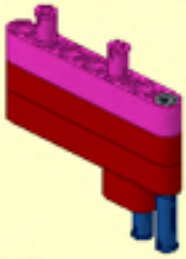

5

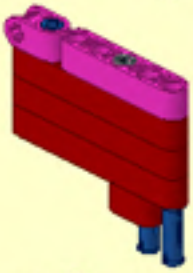

6

7

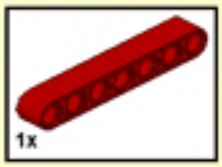

8

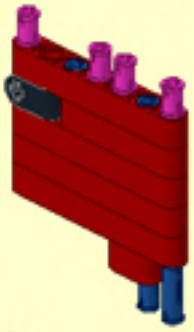

9

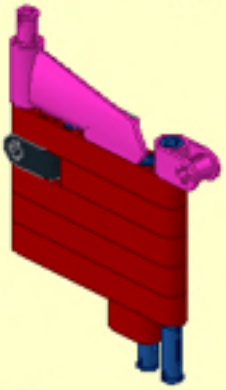

10

11

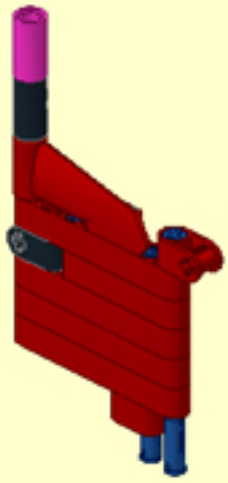

36

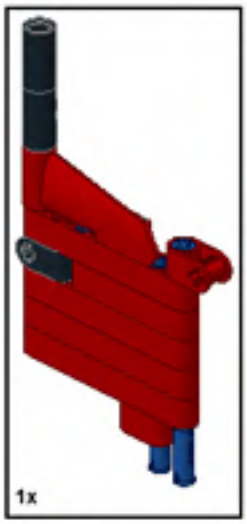

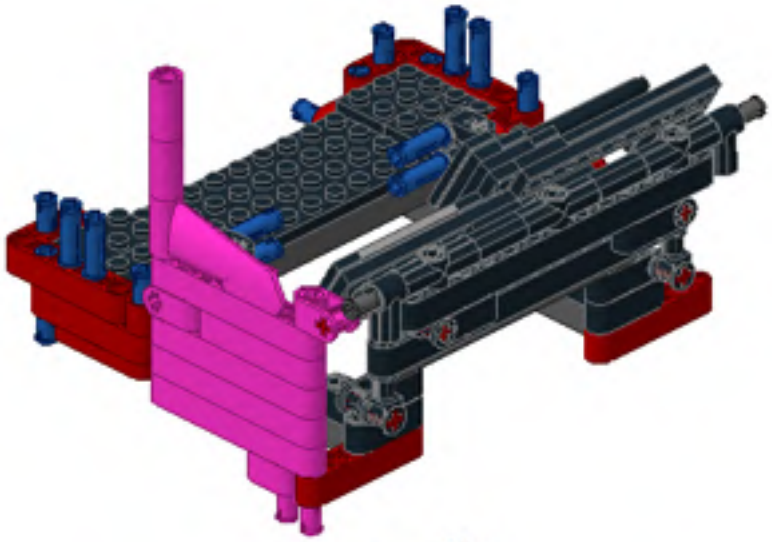

37

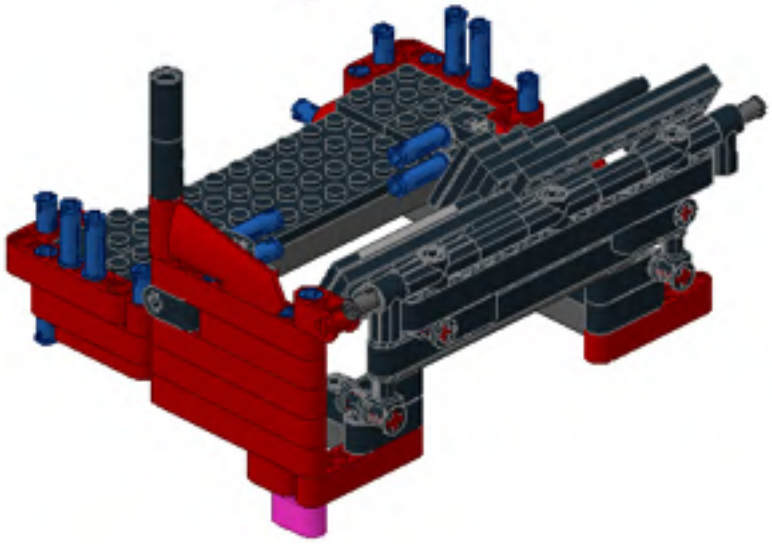

1

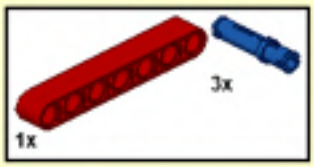

2

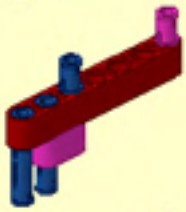

3

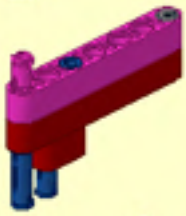

4

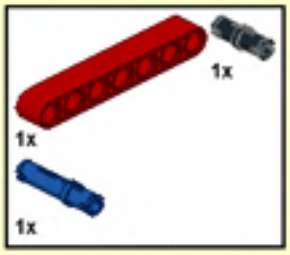

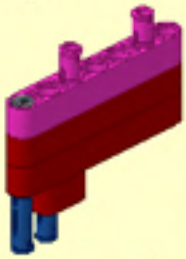

5

6

7

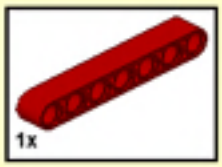

8

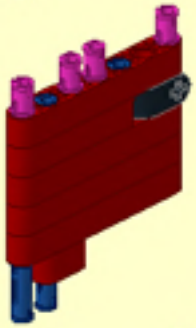

9

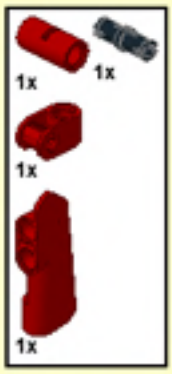

10

11

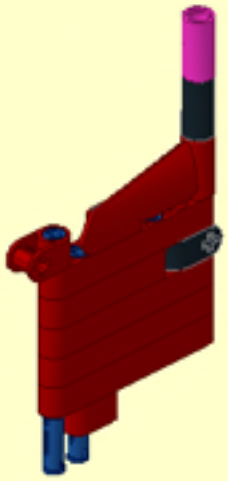

38

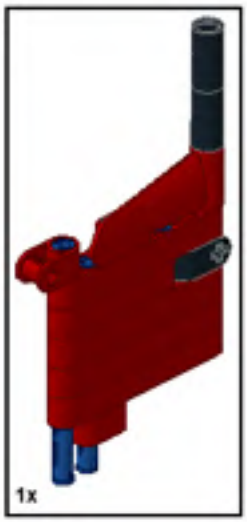

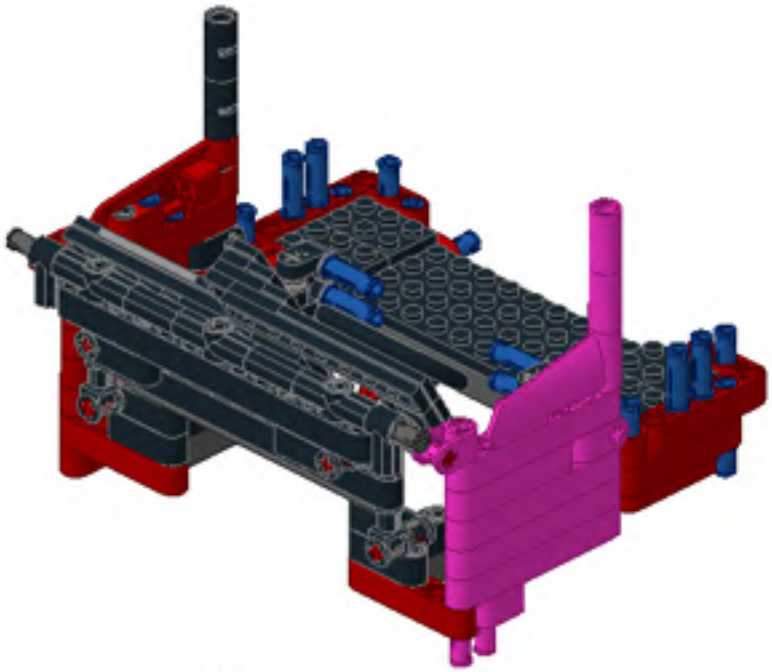

39

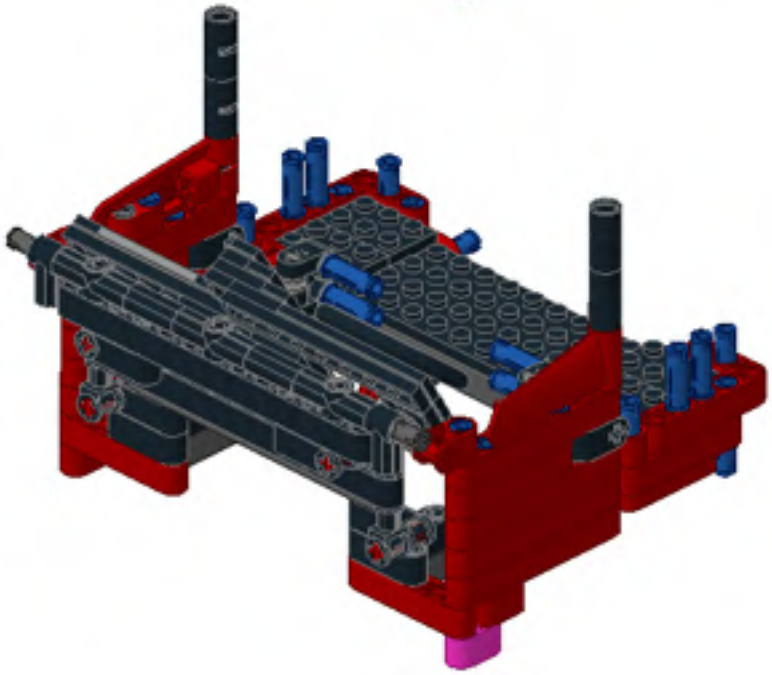

1

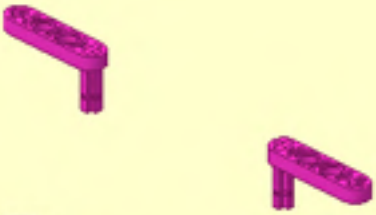

2

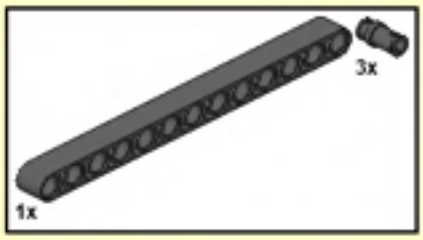

3

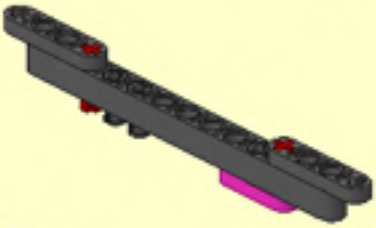

4

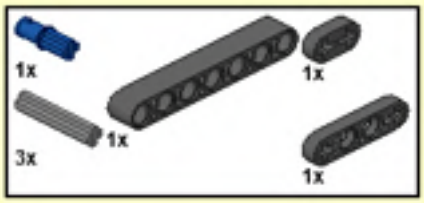

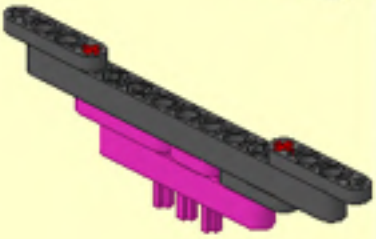

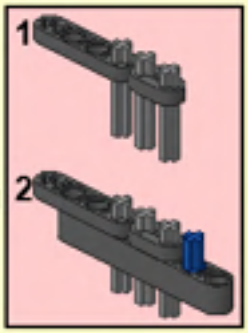

5

6

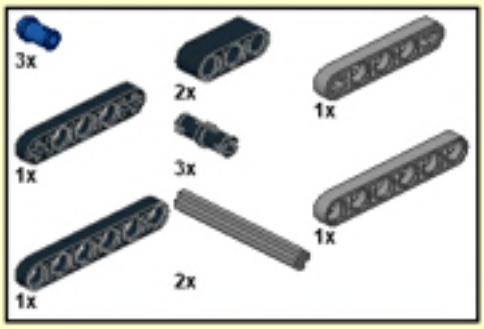

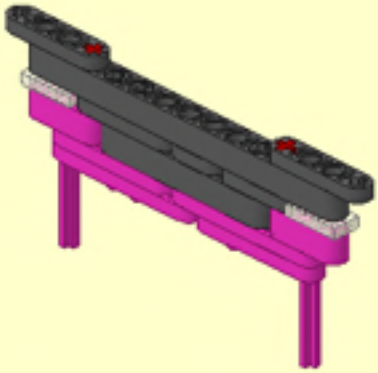

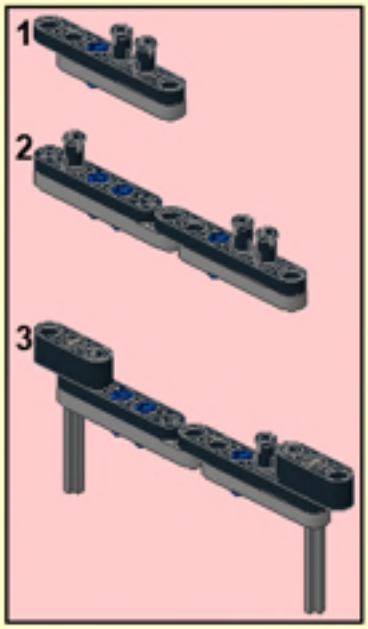

1

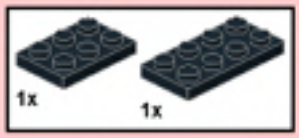

2

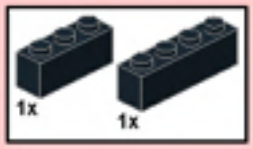

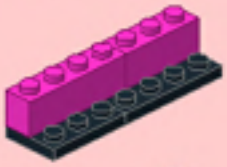

3

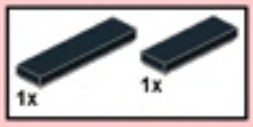

4

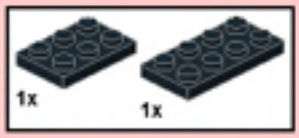

5

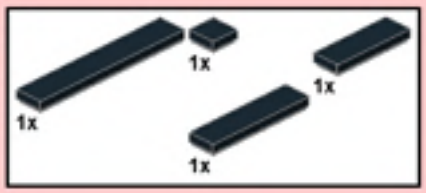

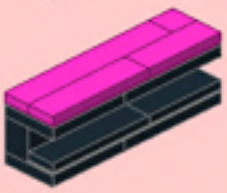

6

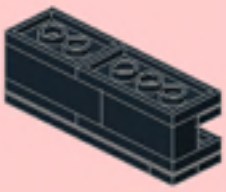

7

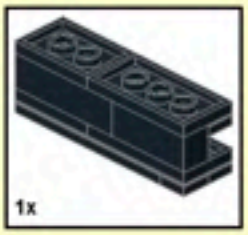

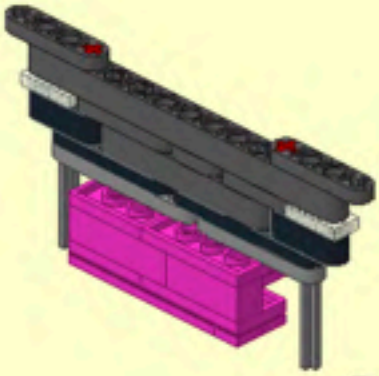

8

9

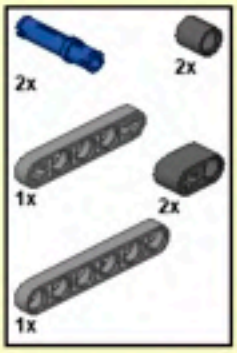

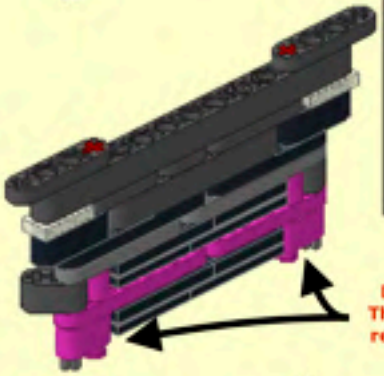

Do not remove these.
They disappeared in the
rest of the instructions.

10

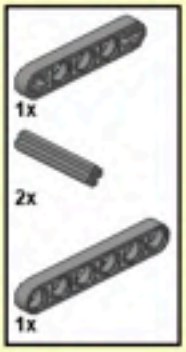

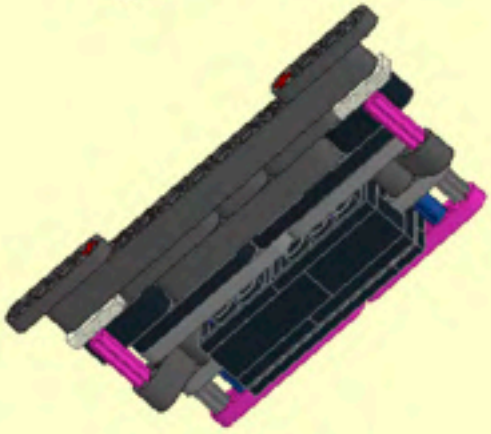

11

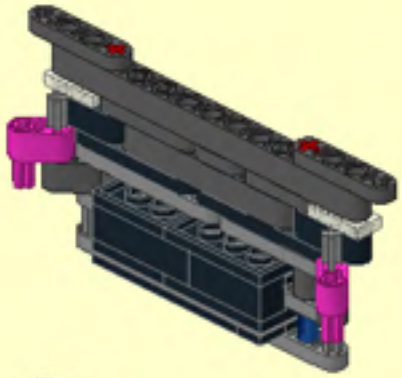

12

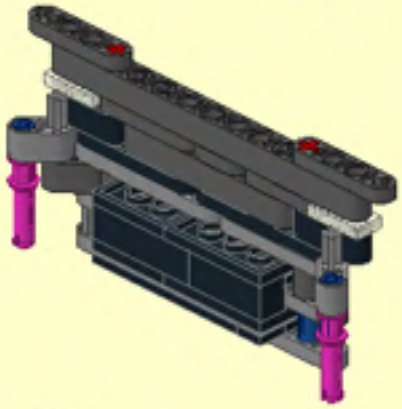

13

14

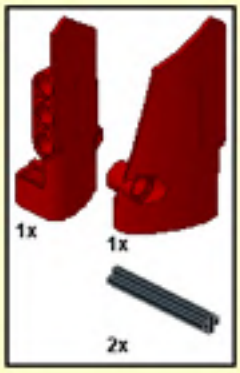

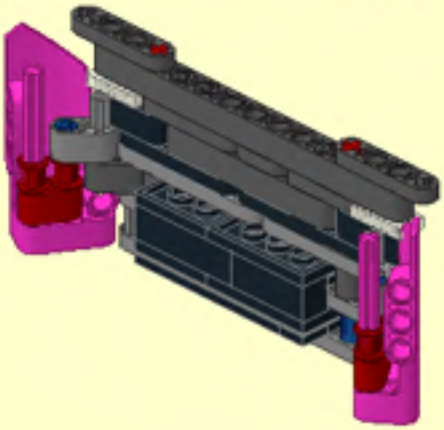

15

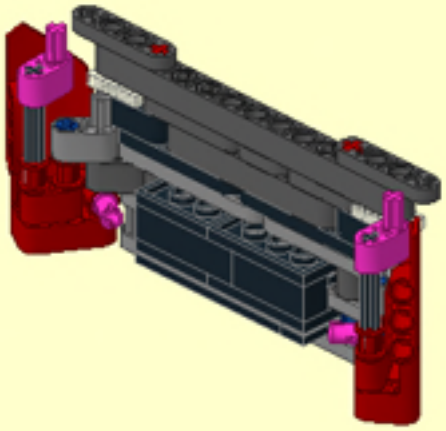

40

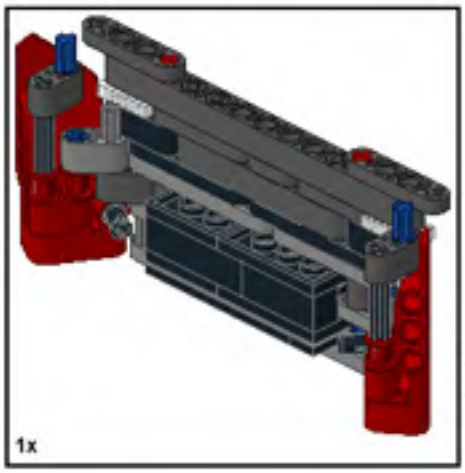

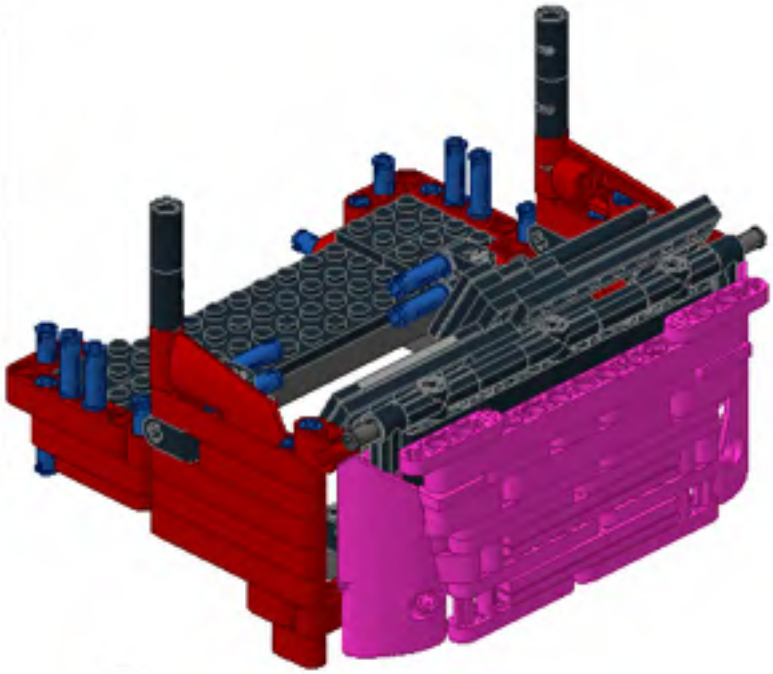

41

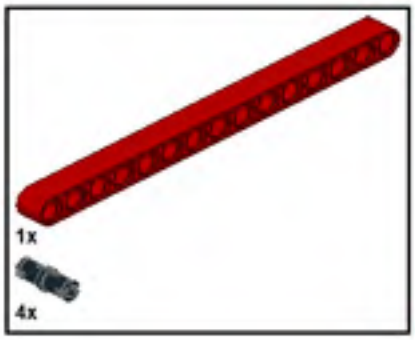

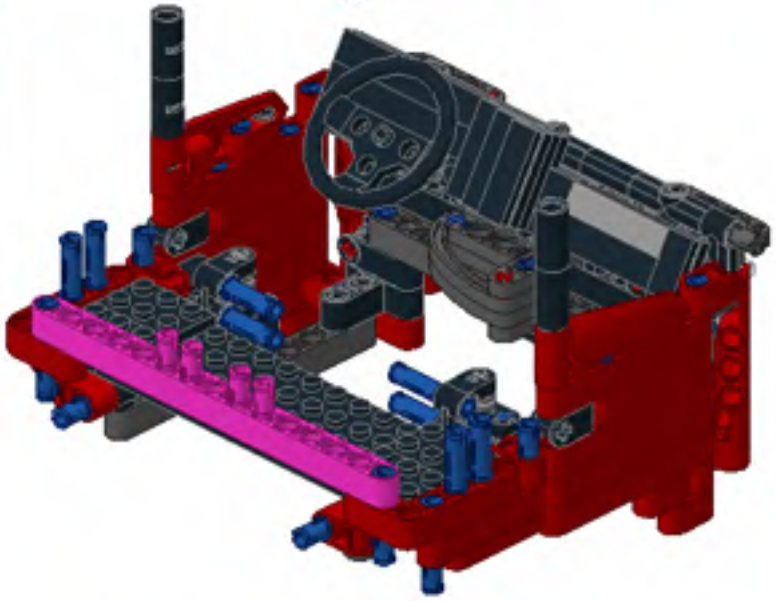

42

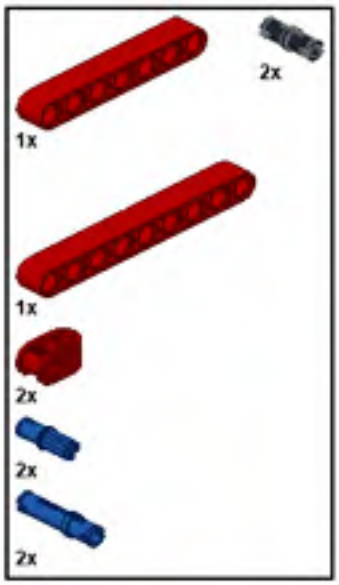

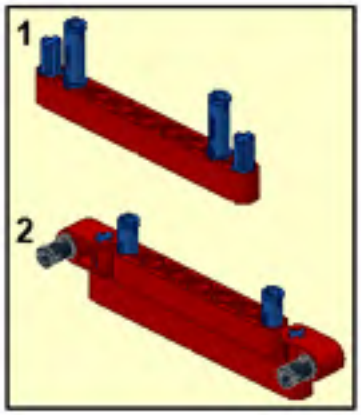

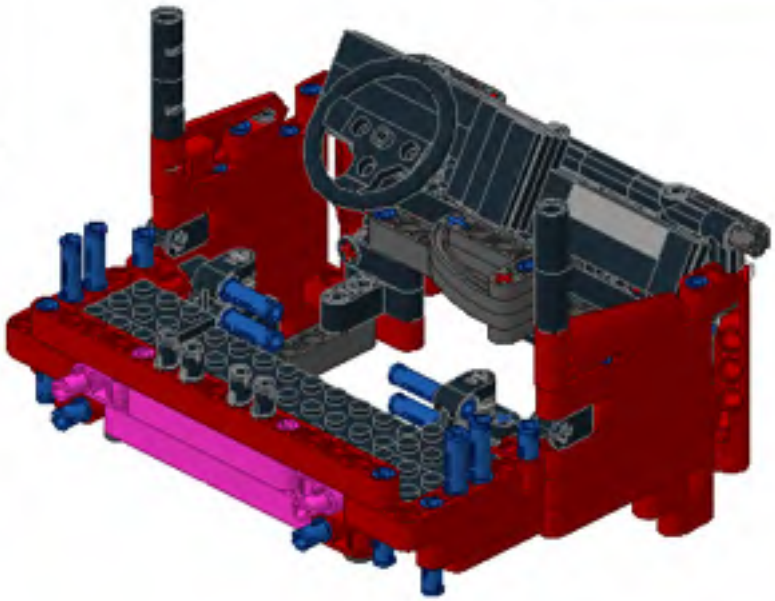

43

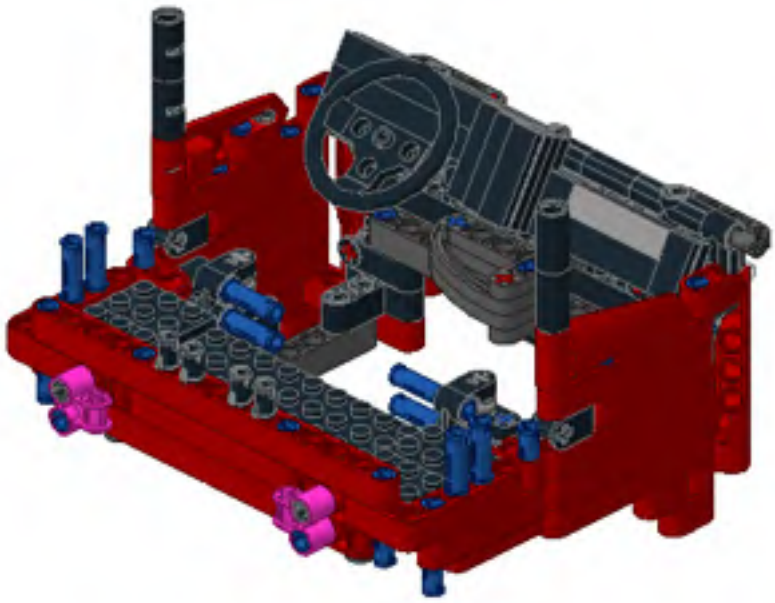

44

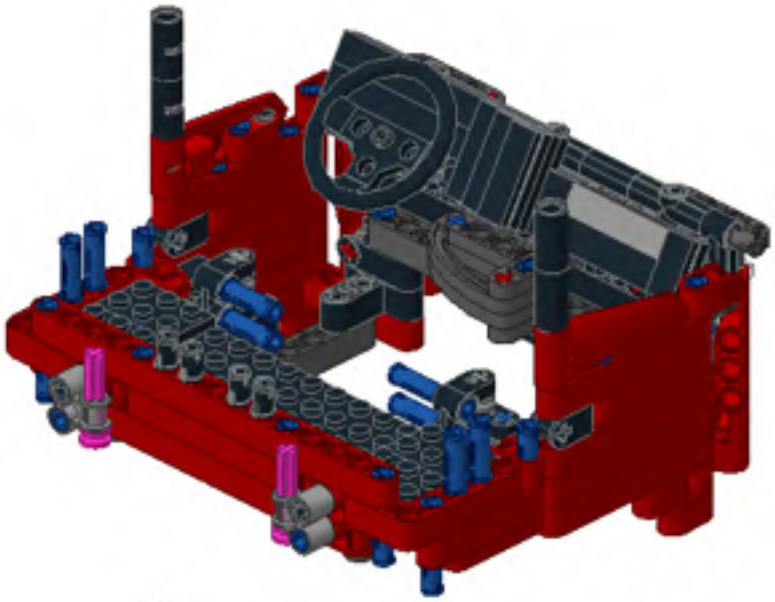

45

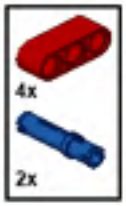

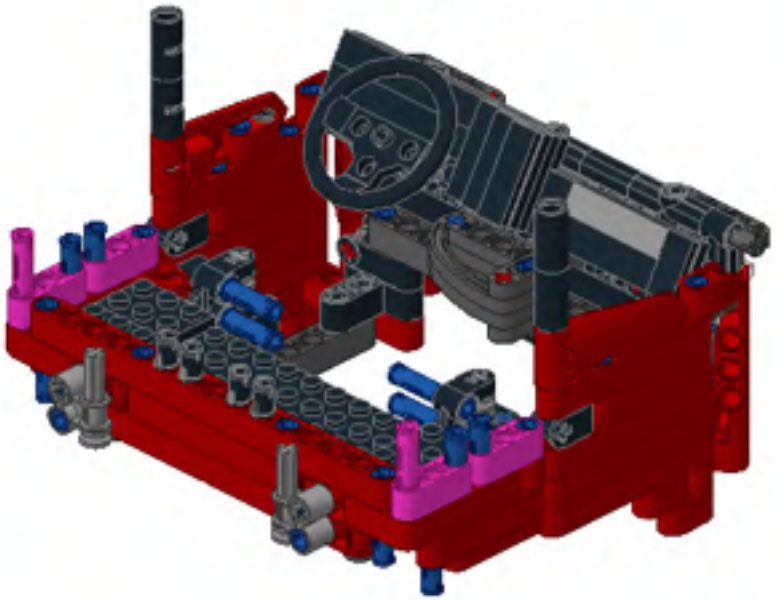

46

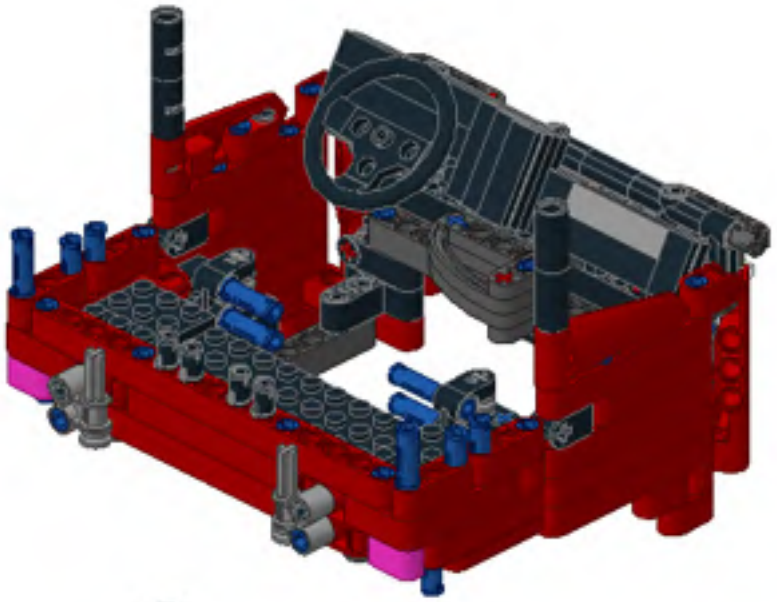

47

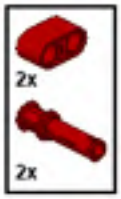

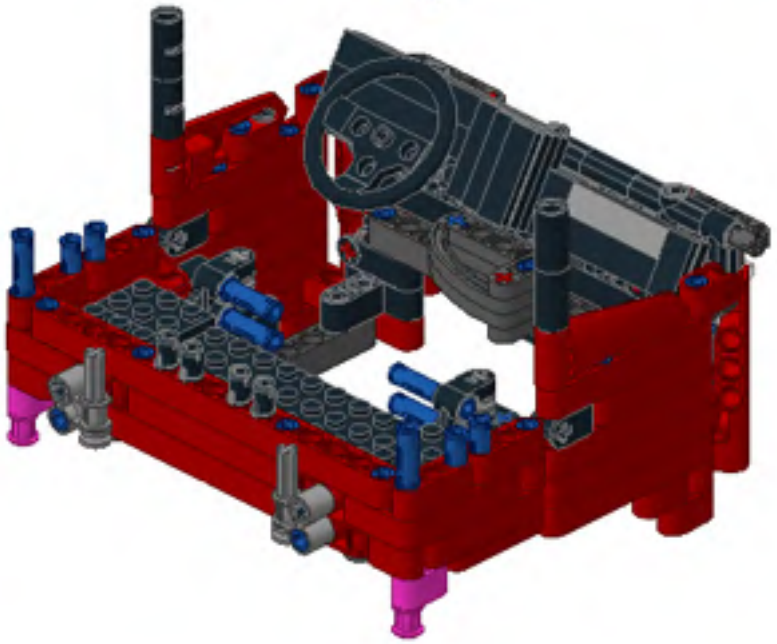

48

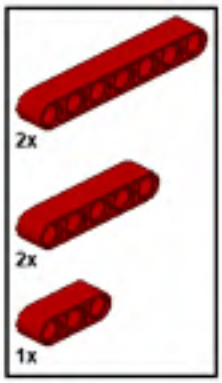

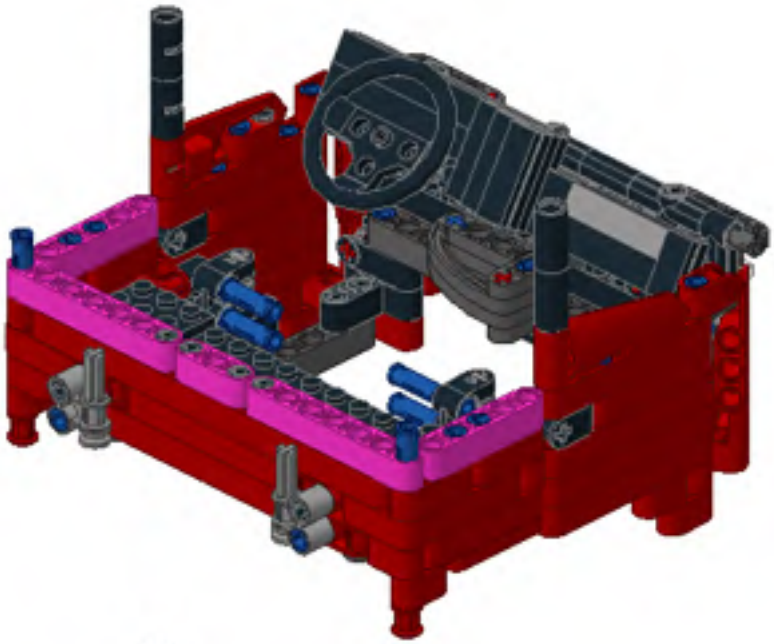

49

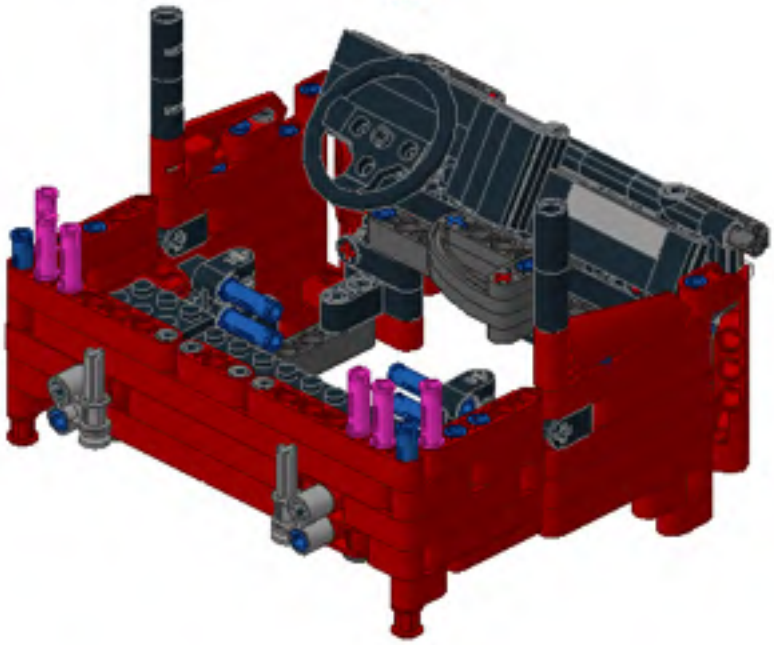

50

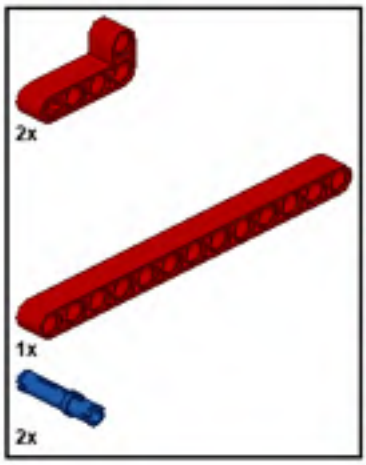

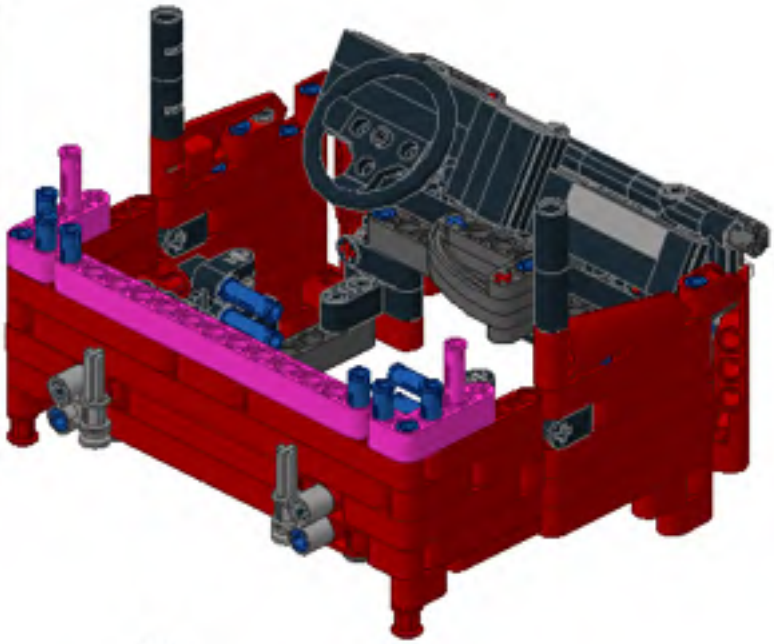

51

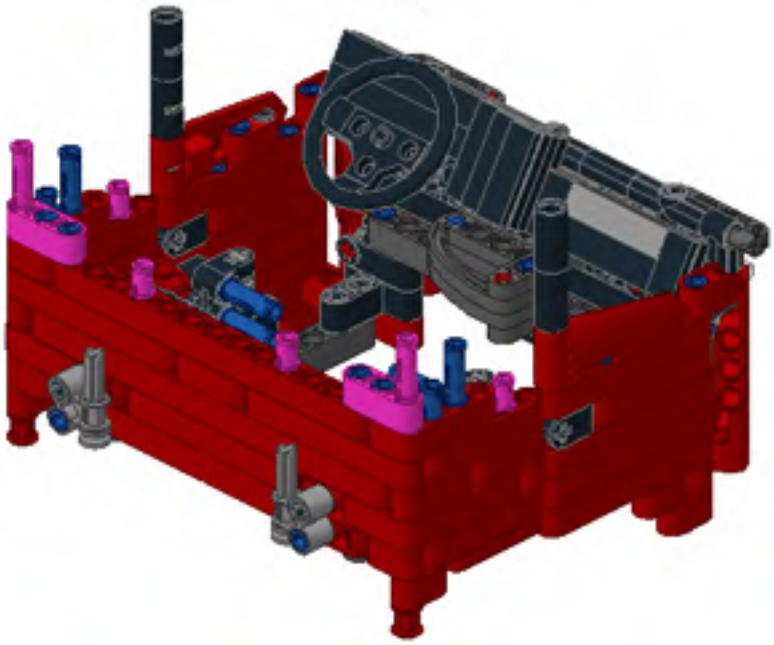

52

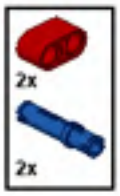

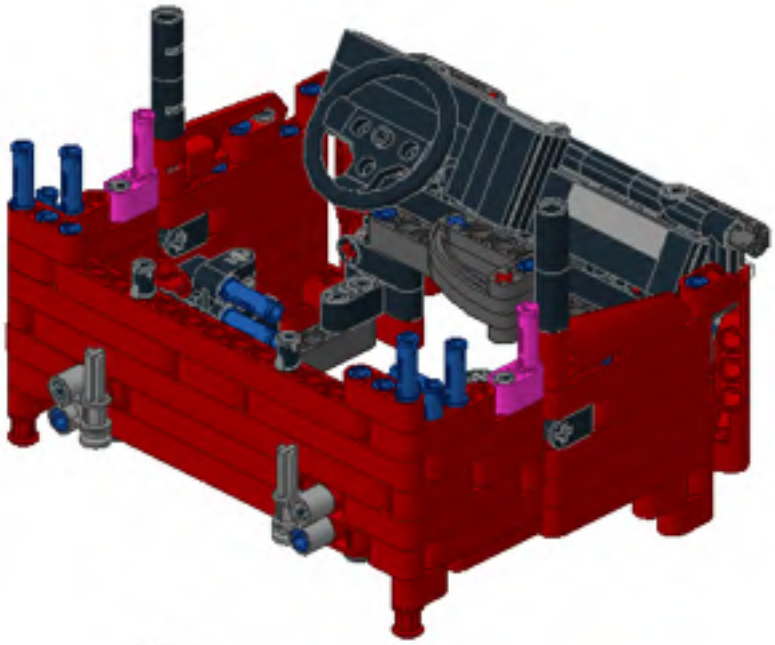

53

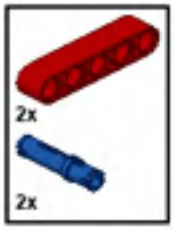

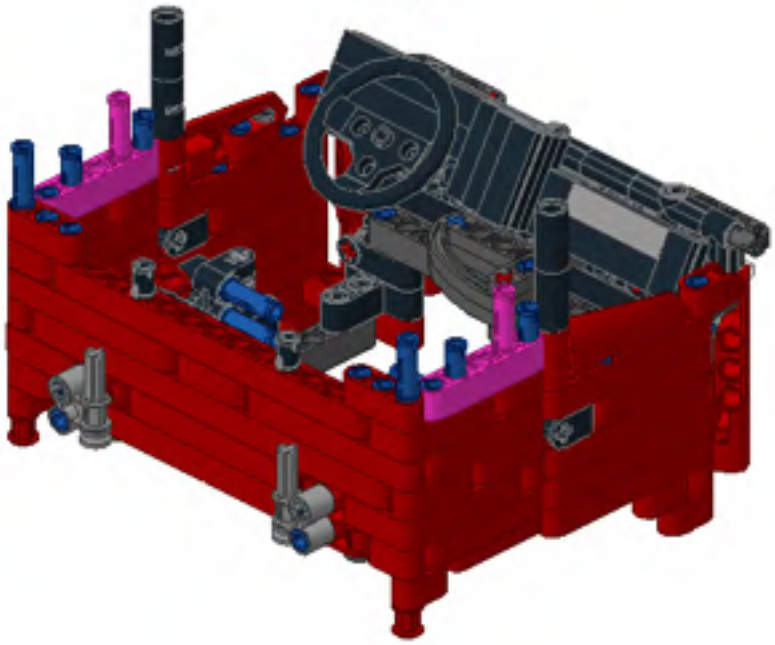

54

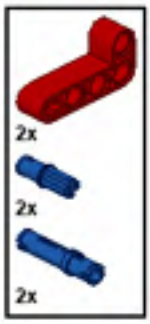

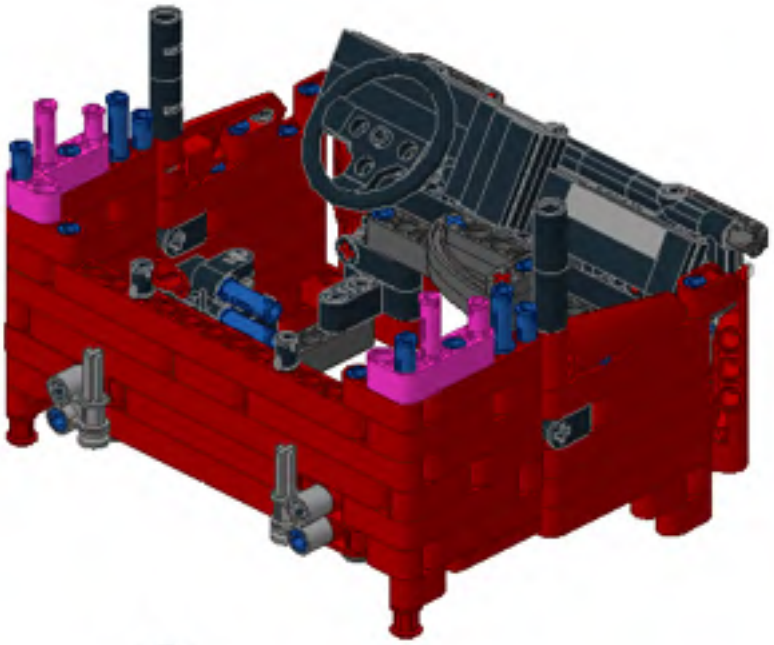

55

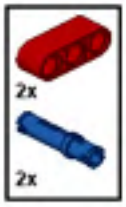

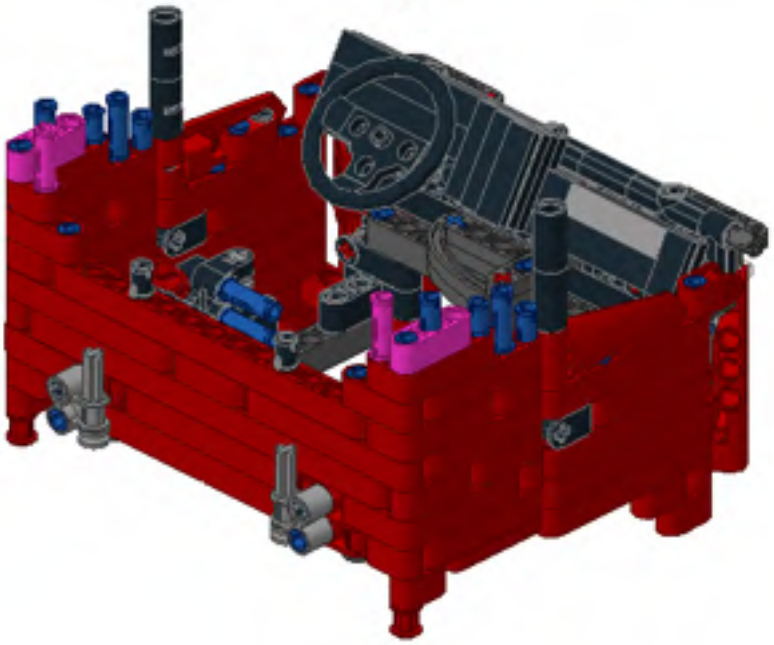

56

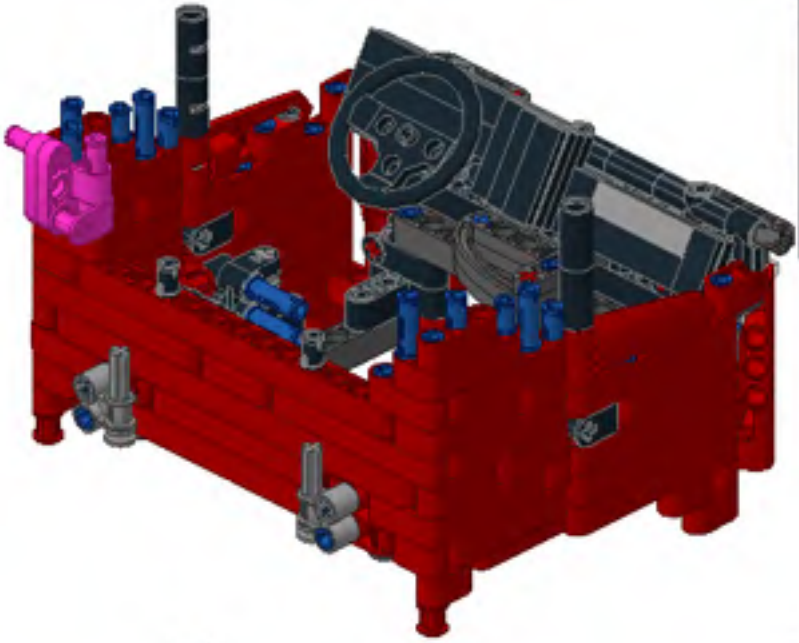

57

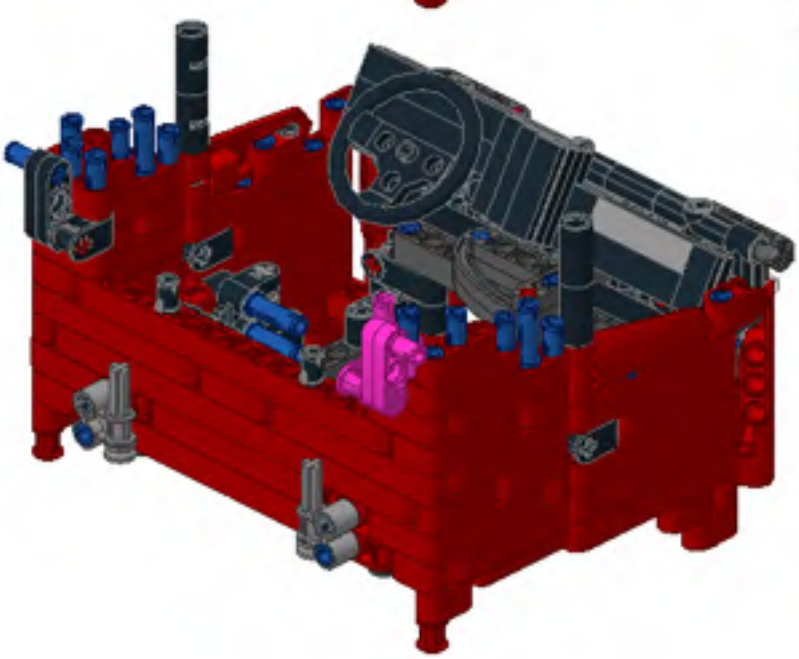

58

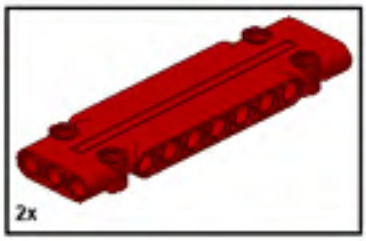

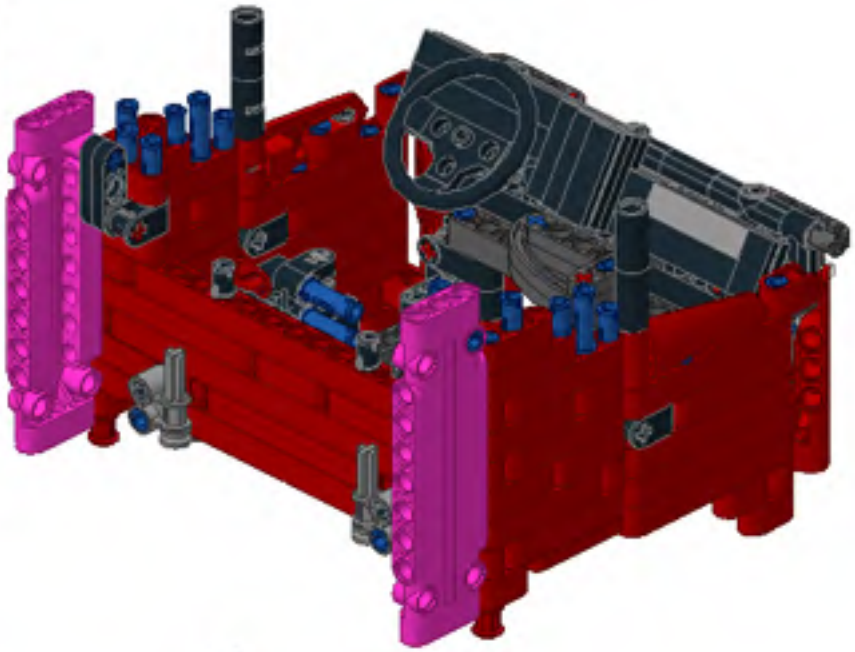

59

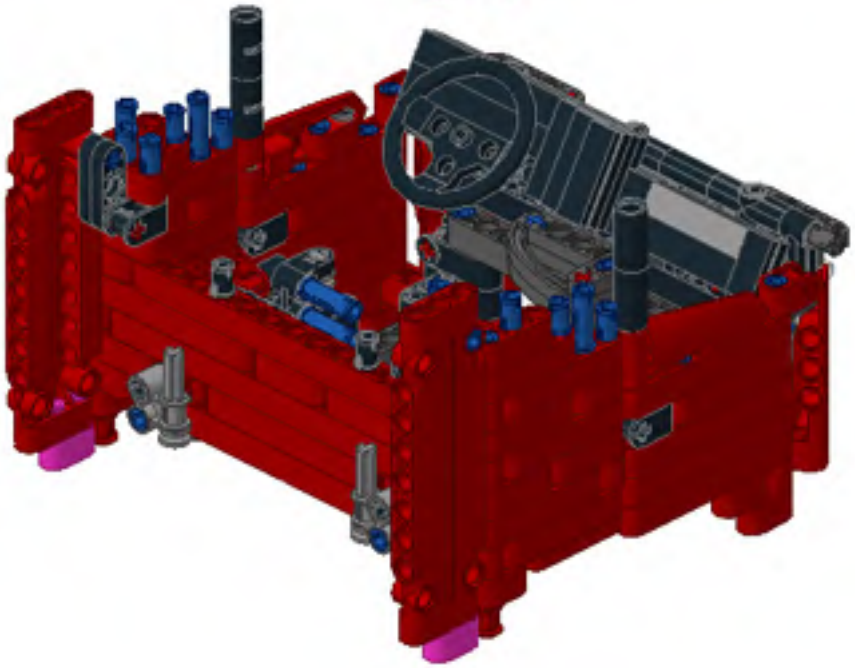

60

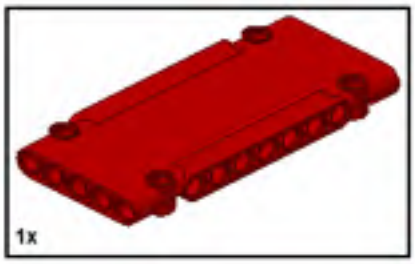

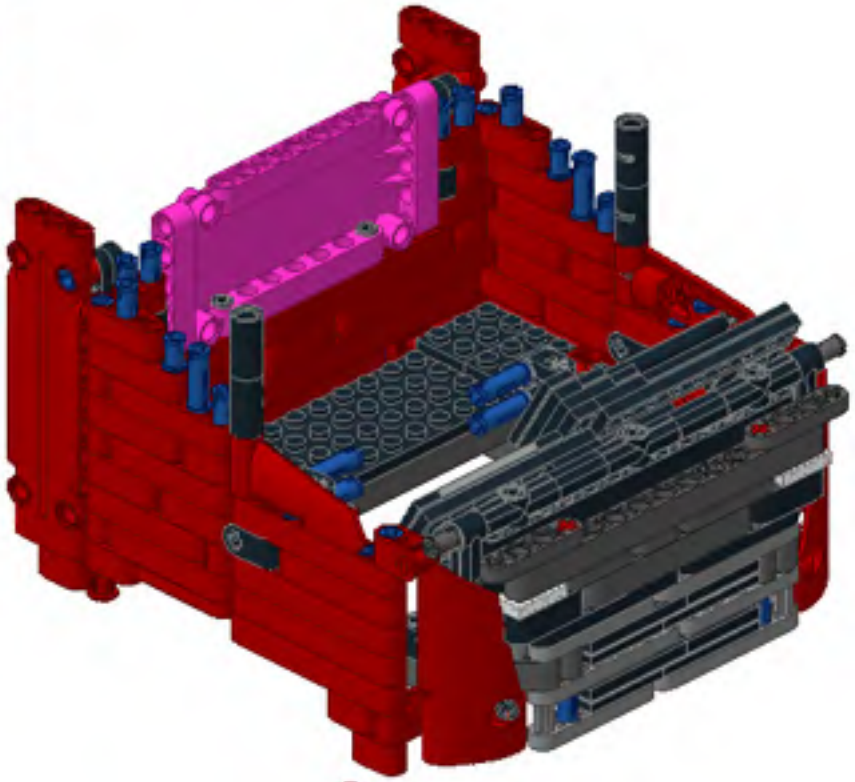

61

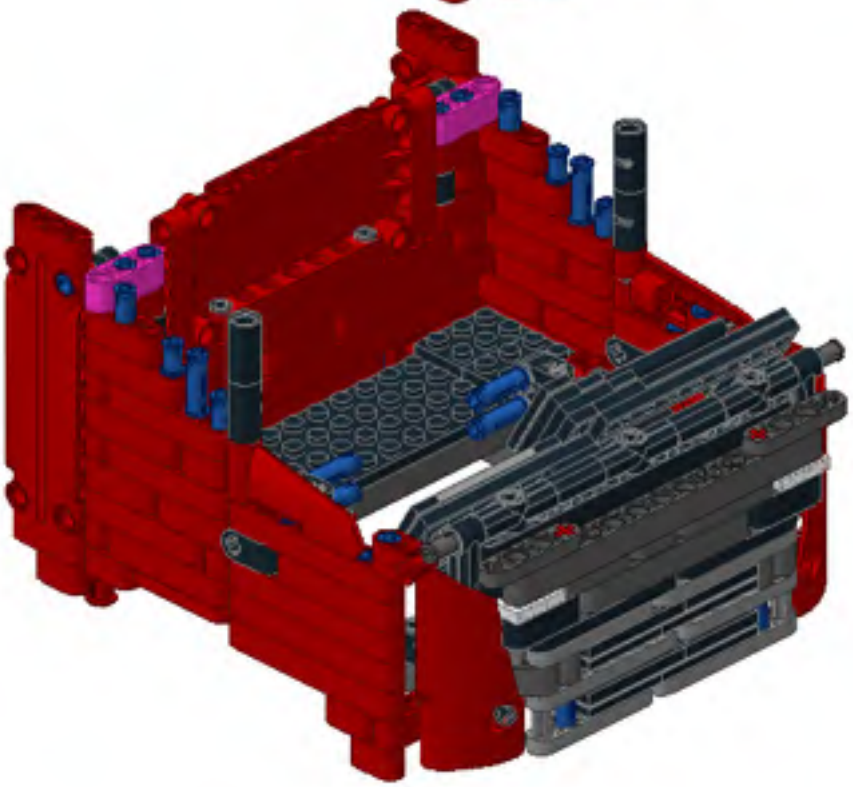

62

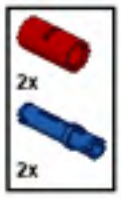

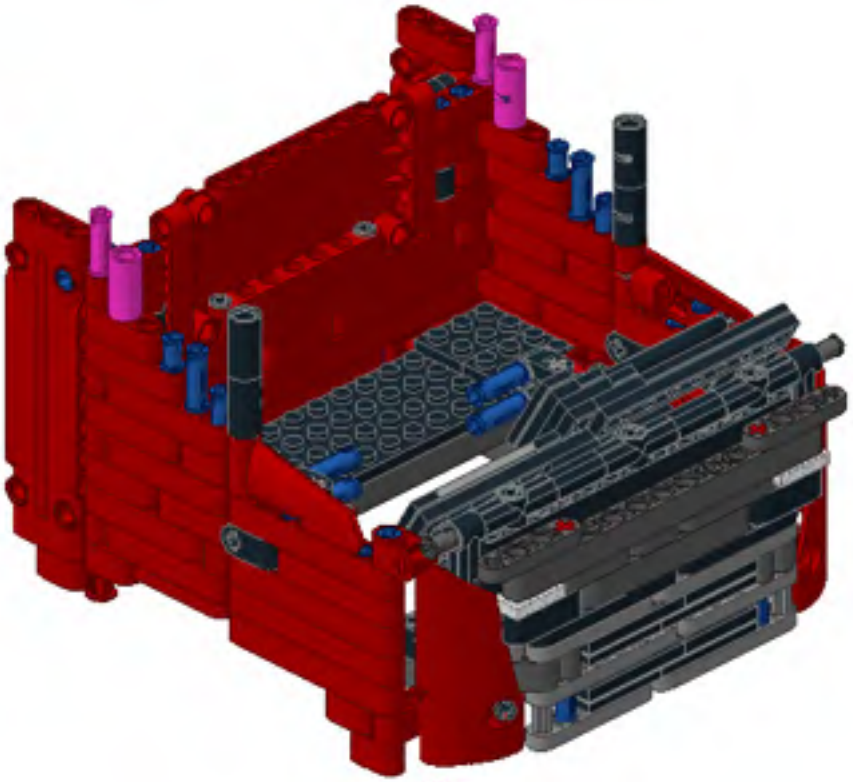

63

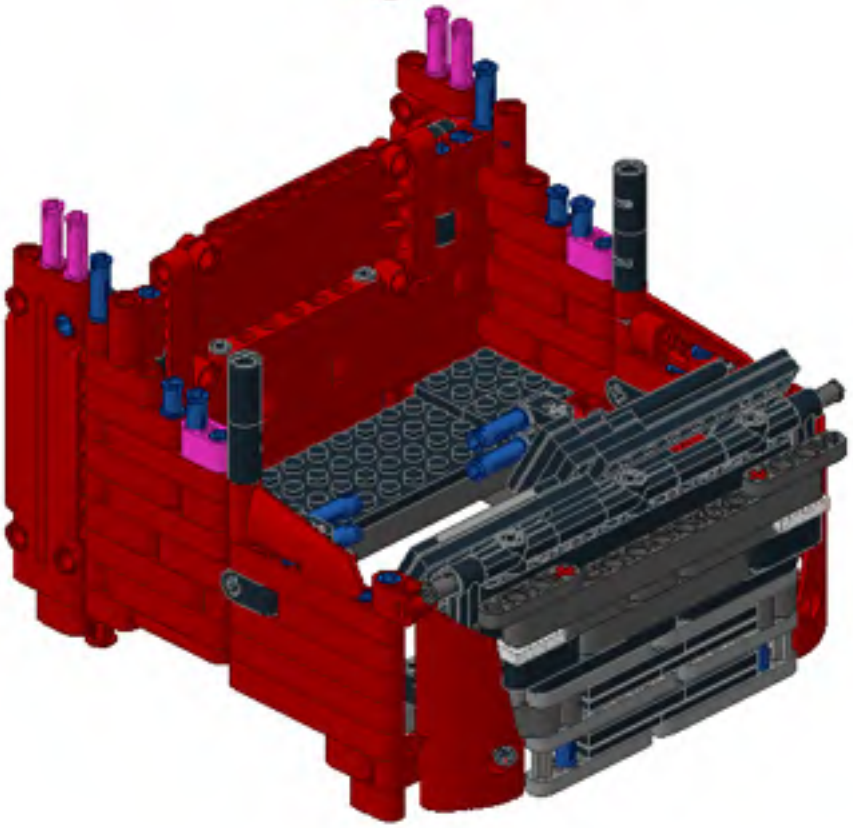

64

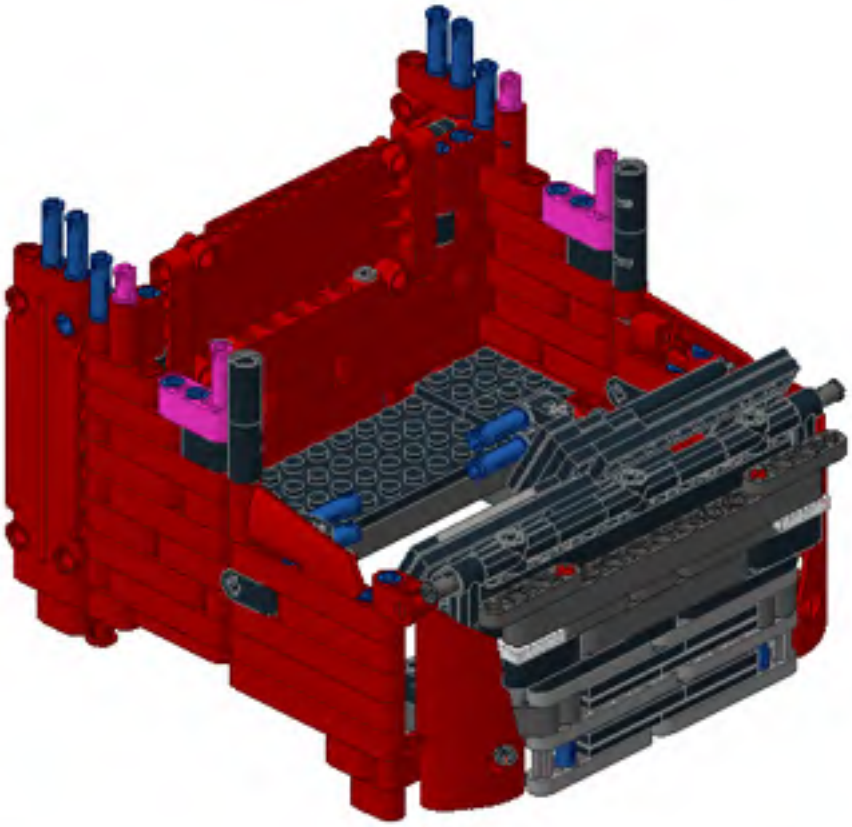

65

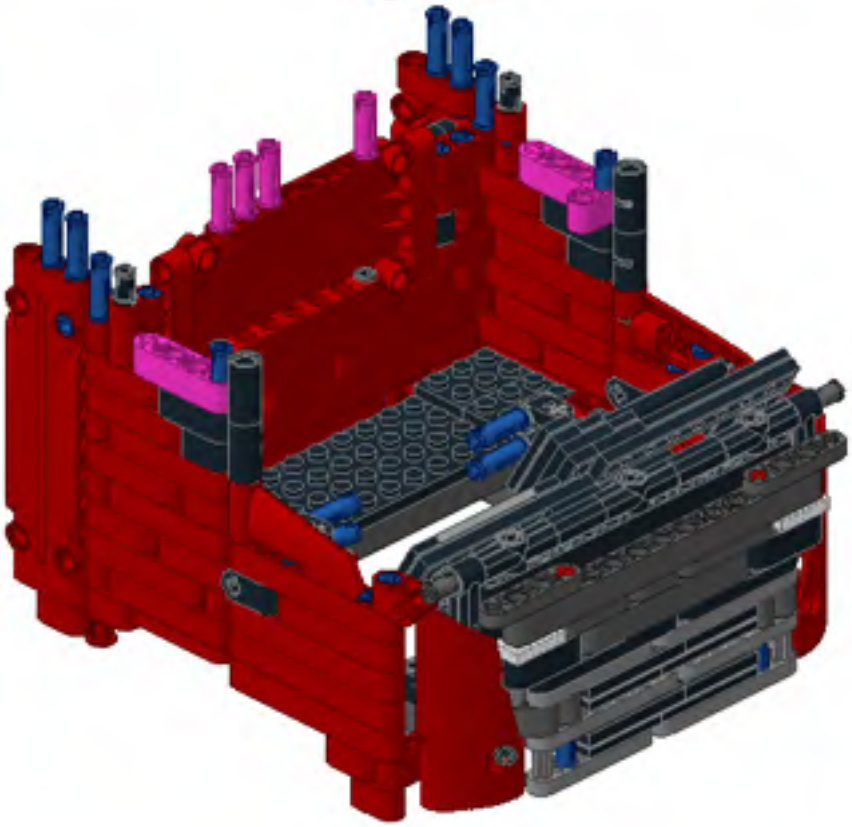

66

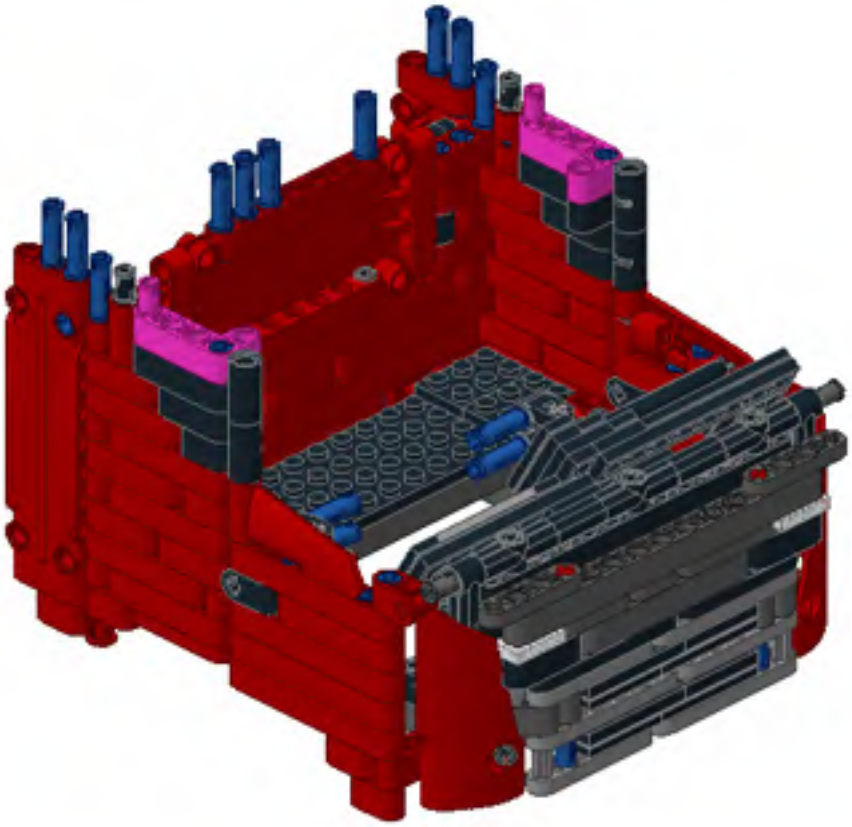

67

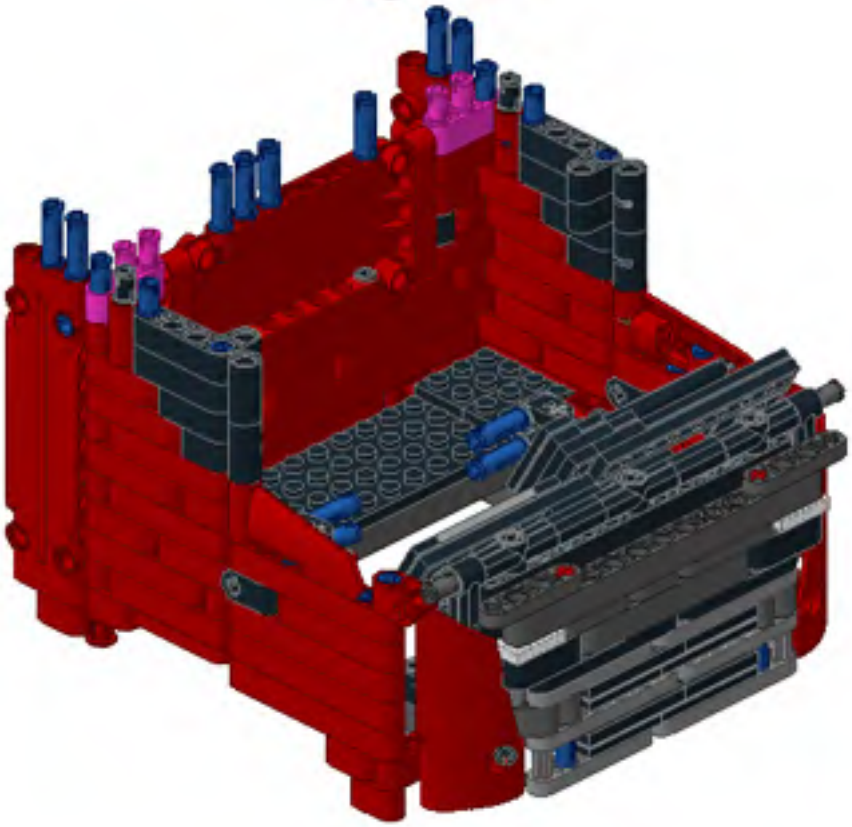

68

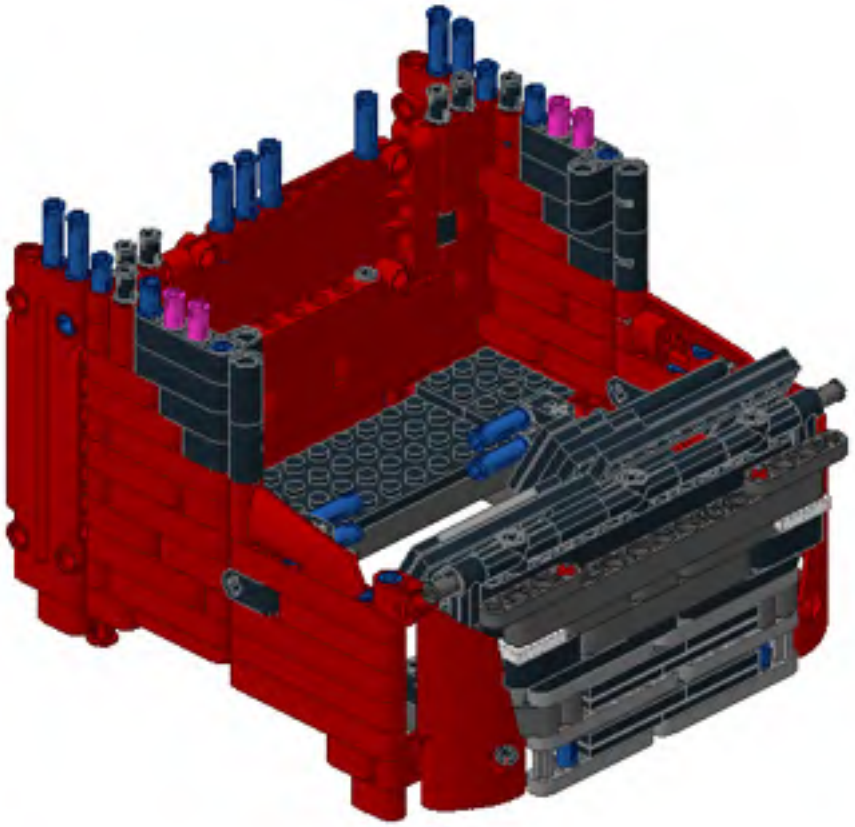

69

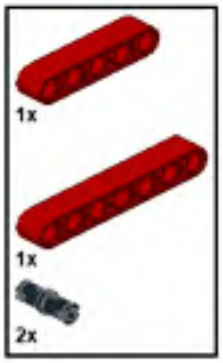

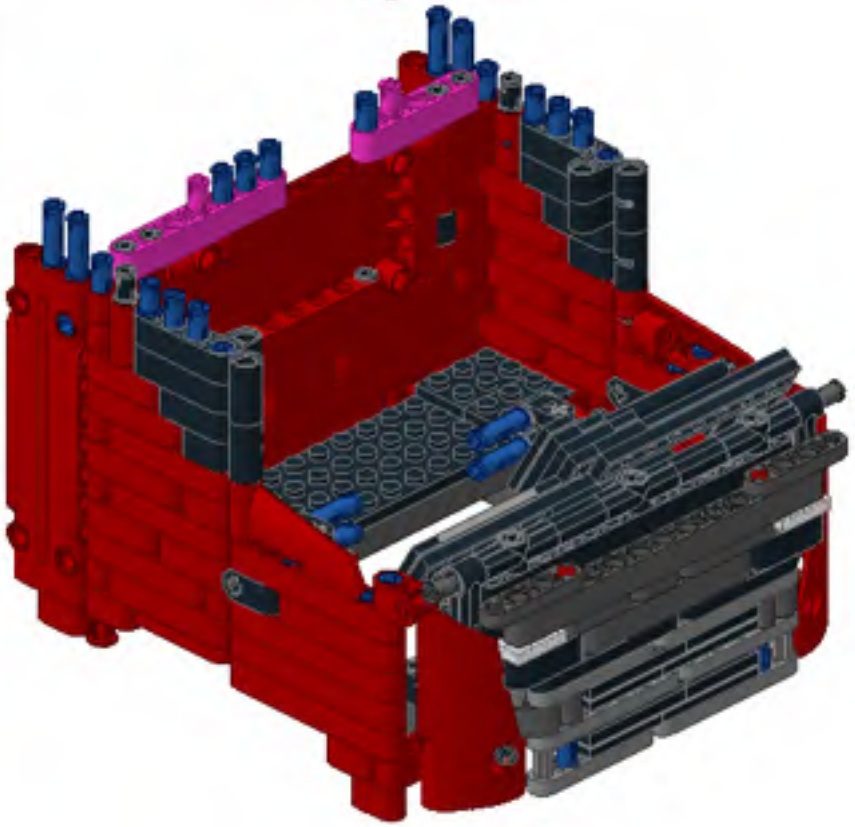

70

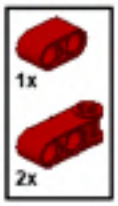

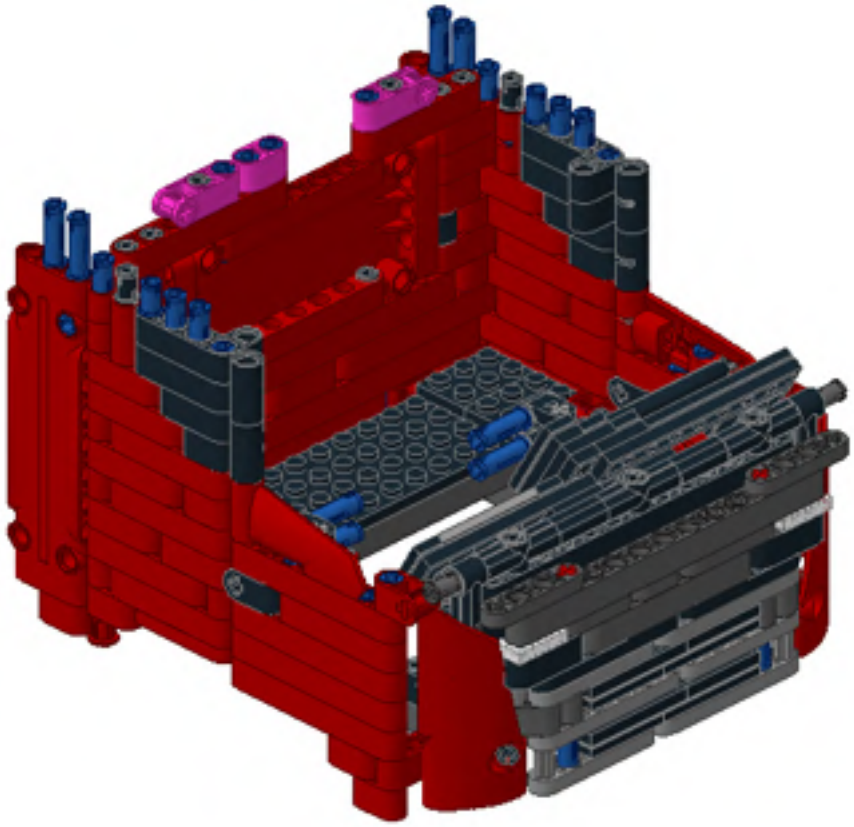

71

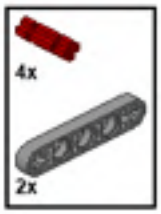

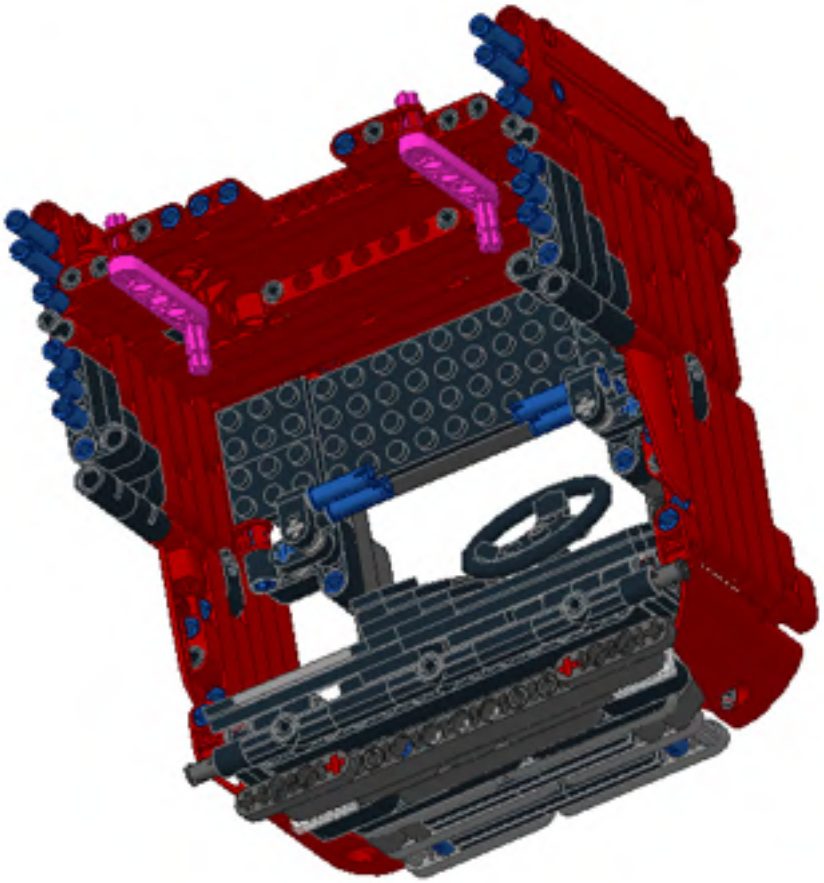

72

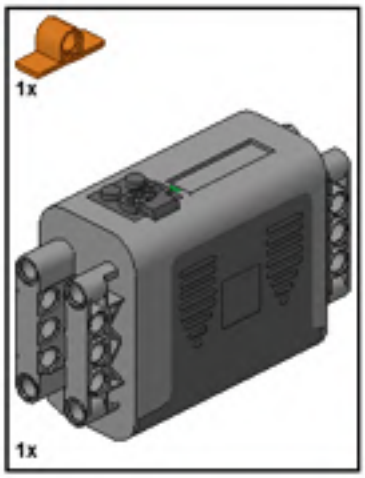

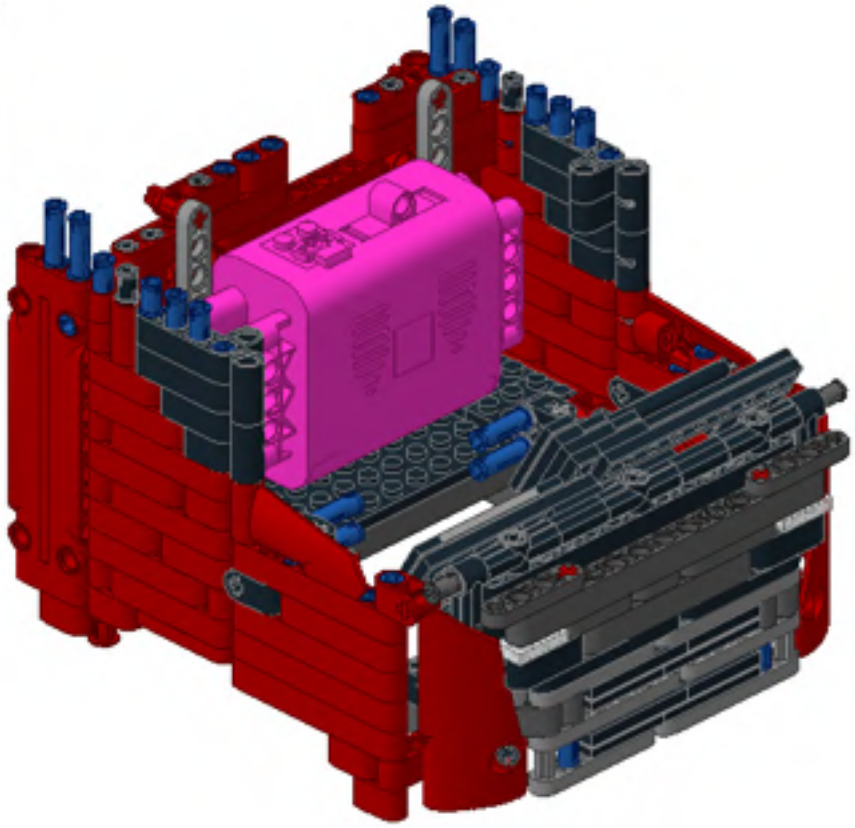

1

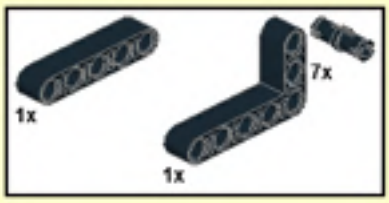

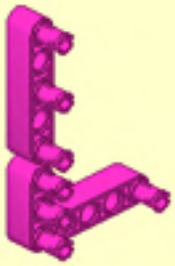

2

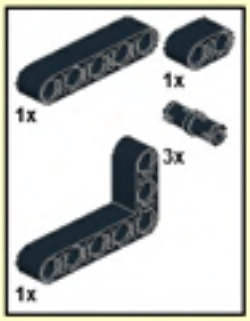

3

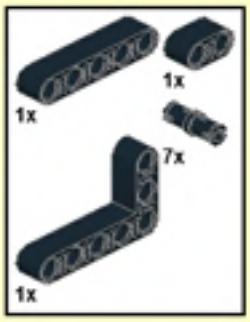

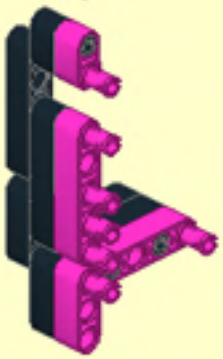

4

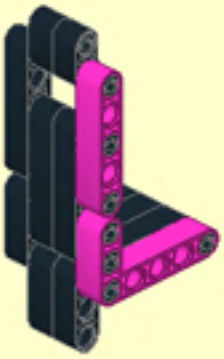

73

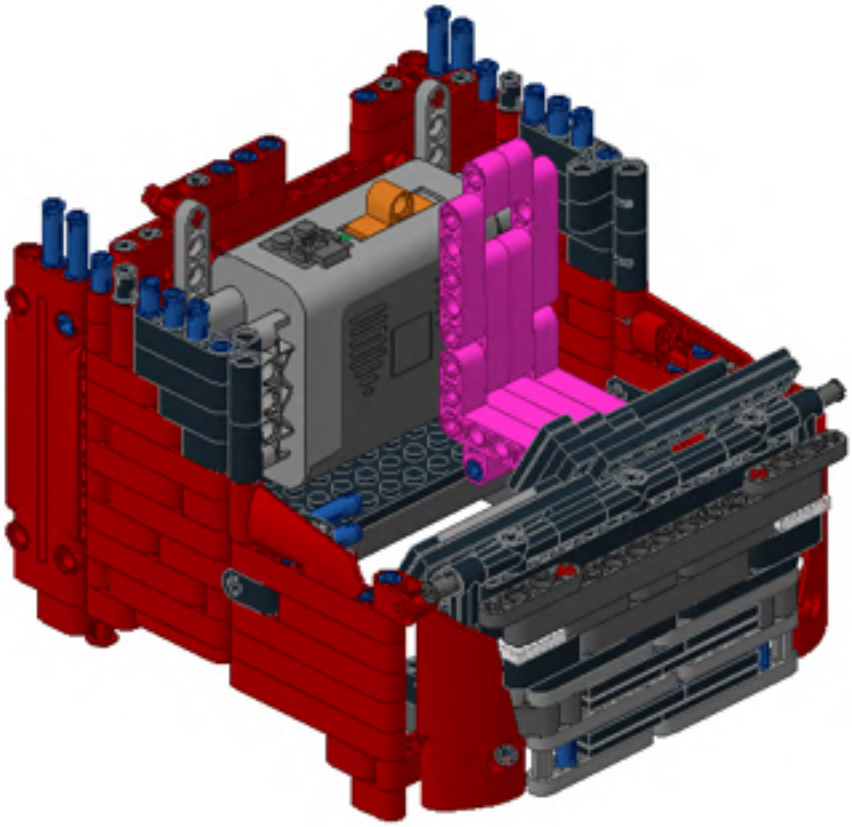

1

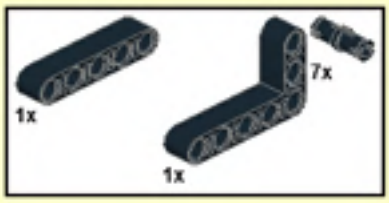

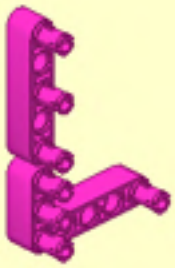

2

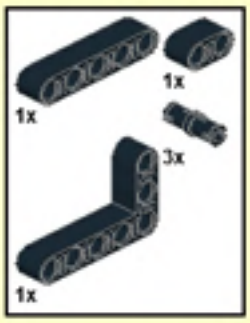

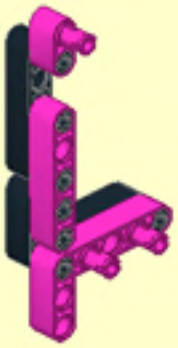

3

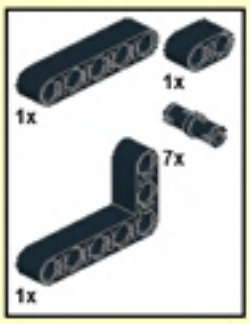

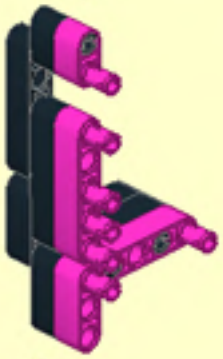

4

74

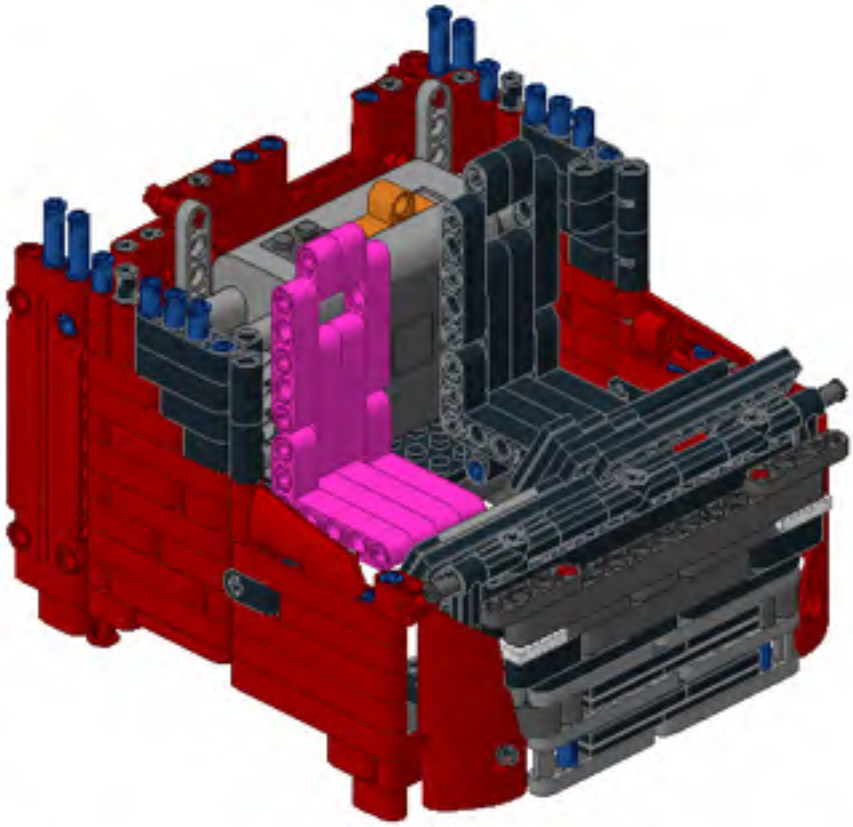

75

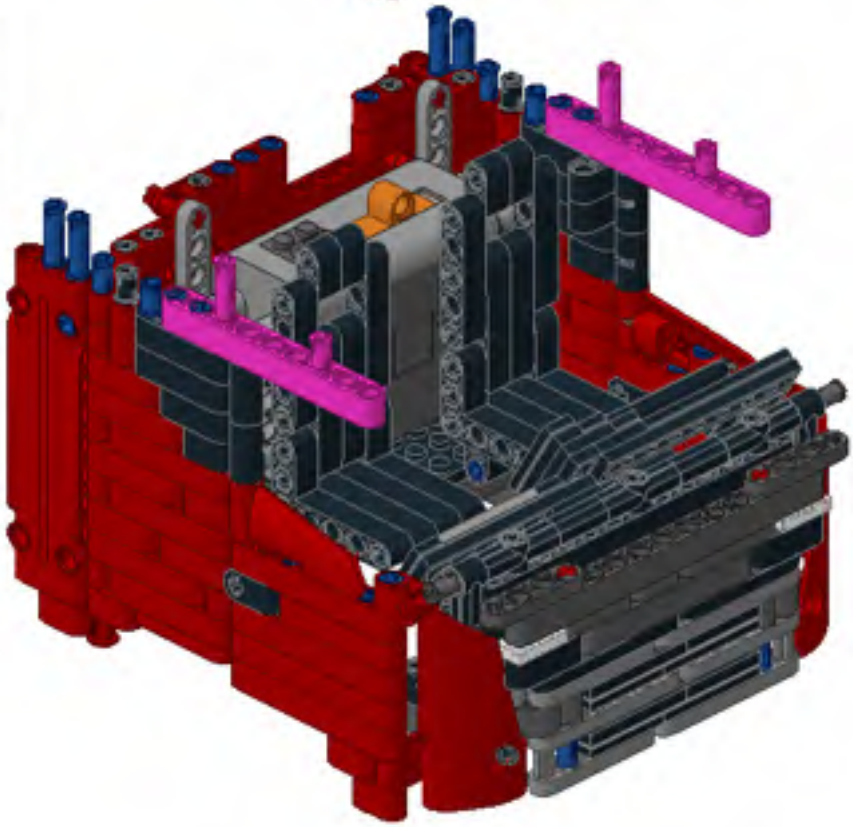

76

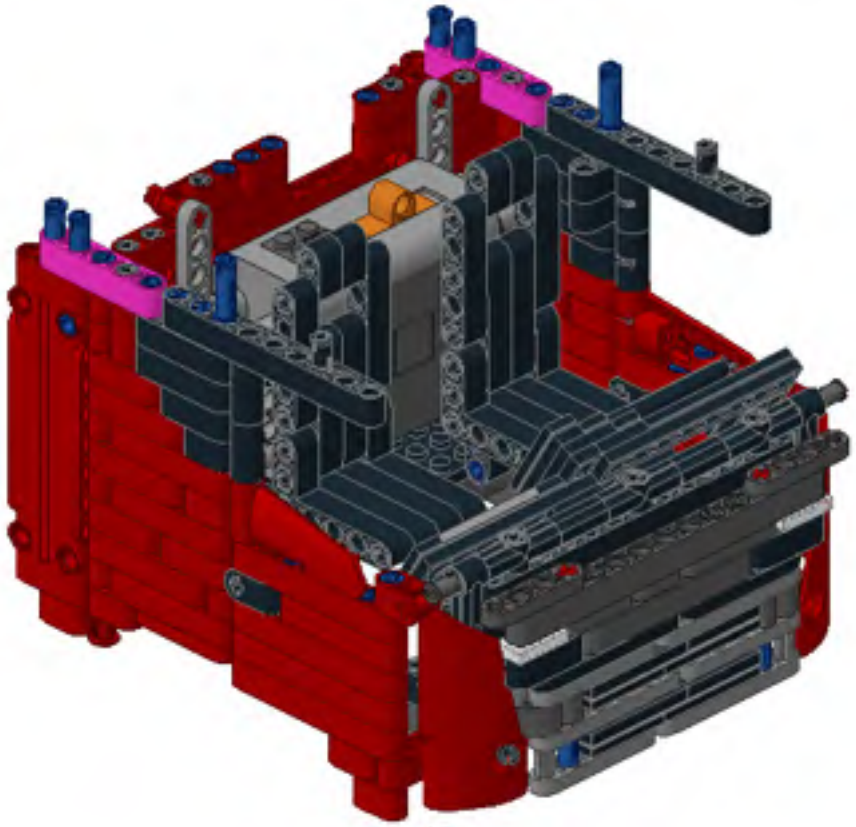

77

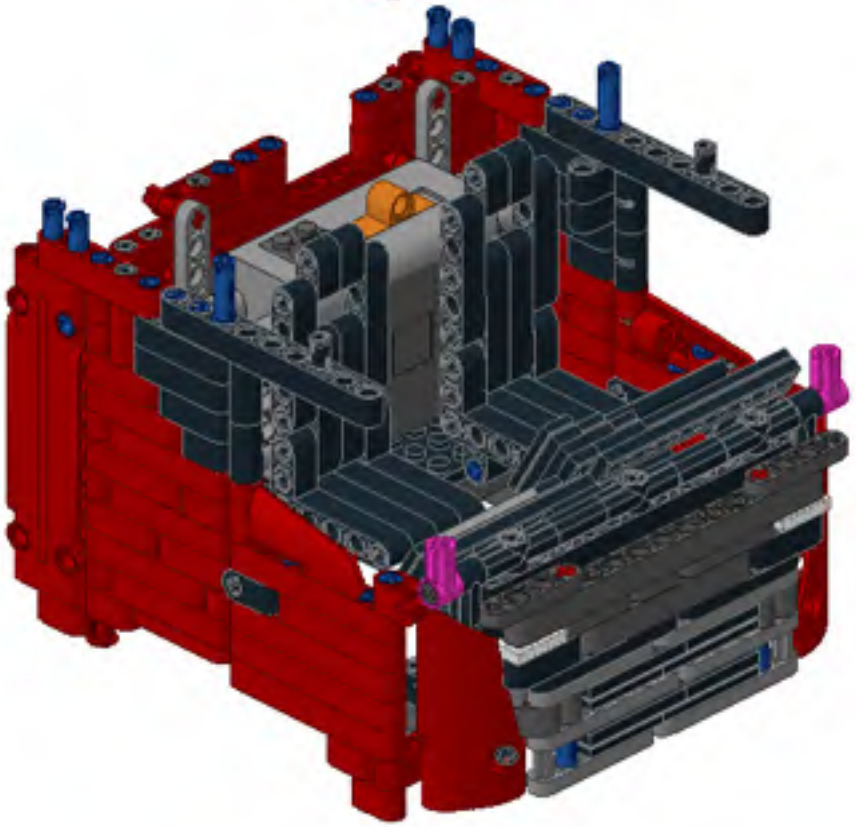

78

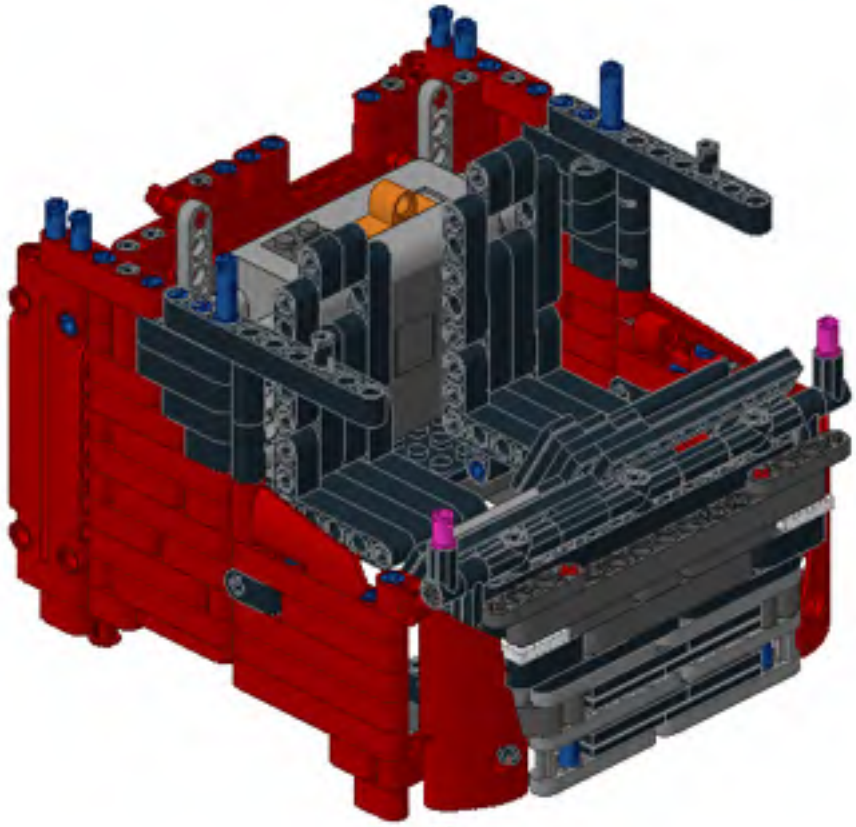

79

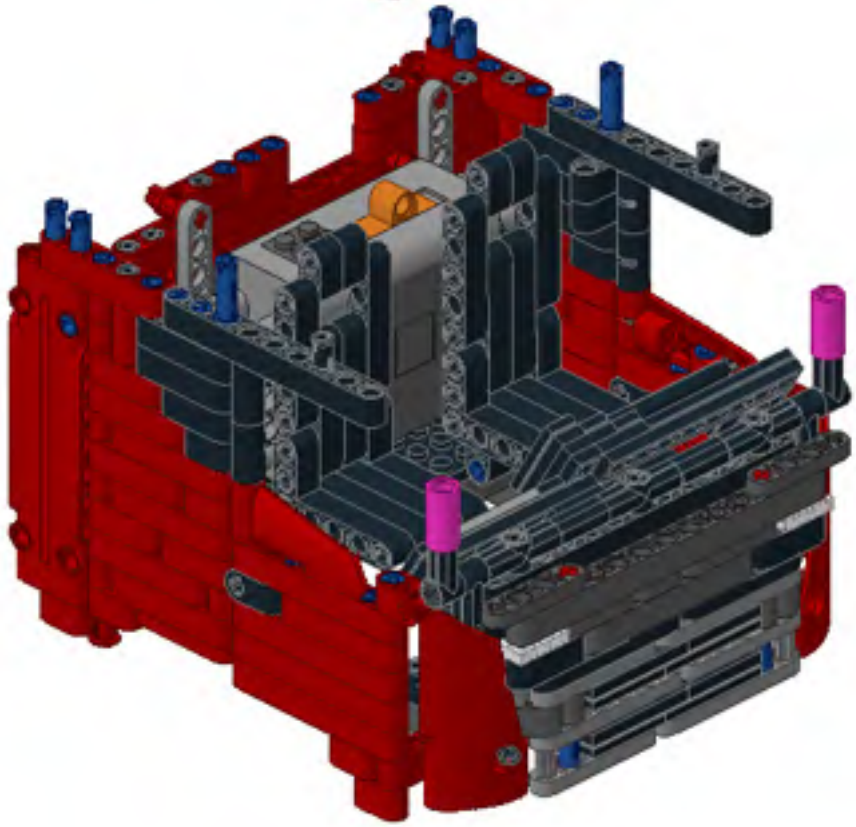

80

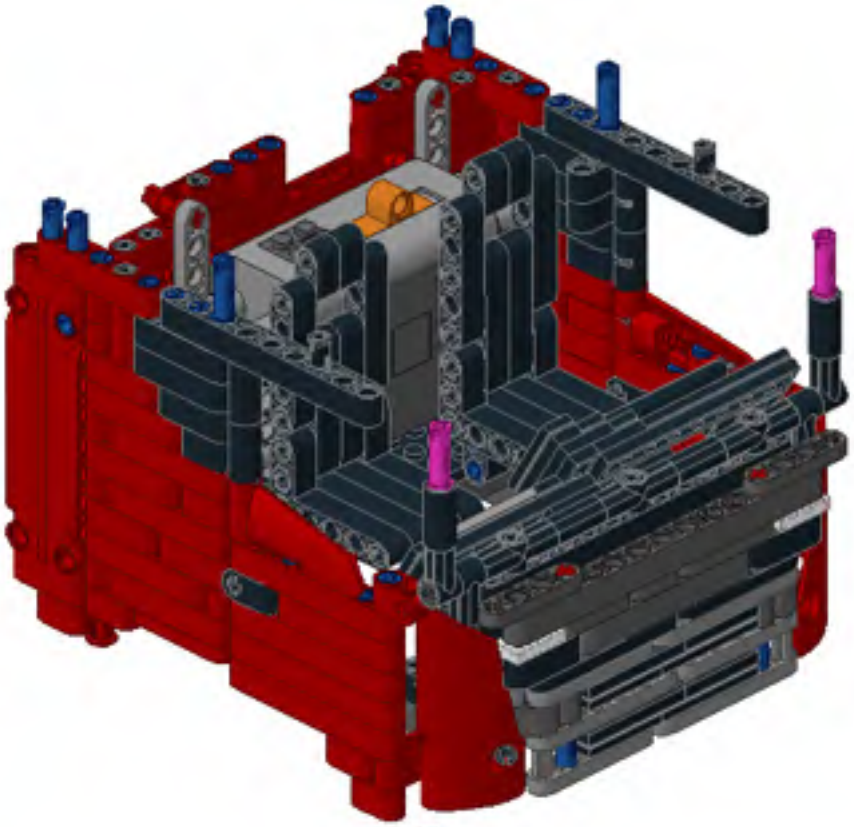

81

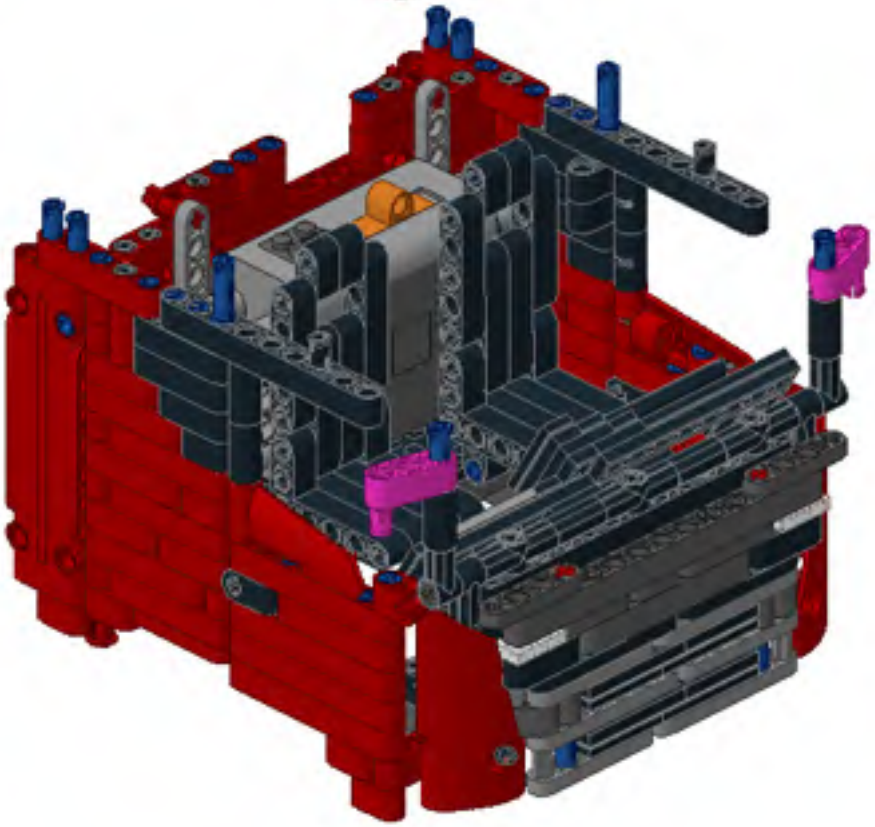

82

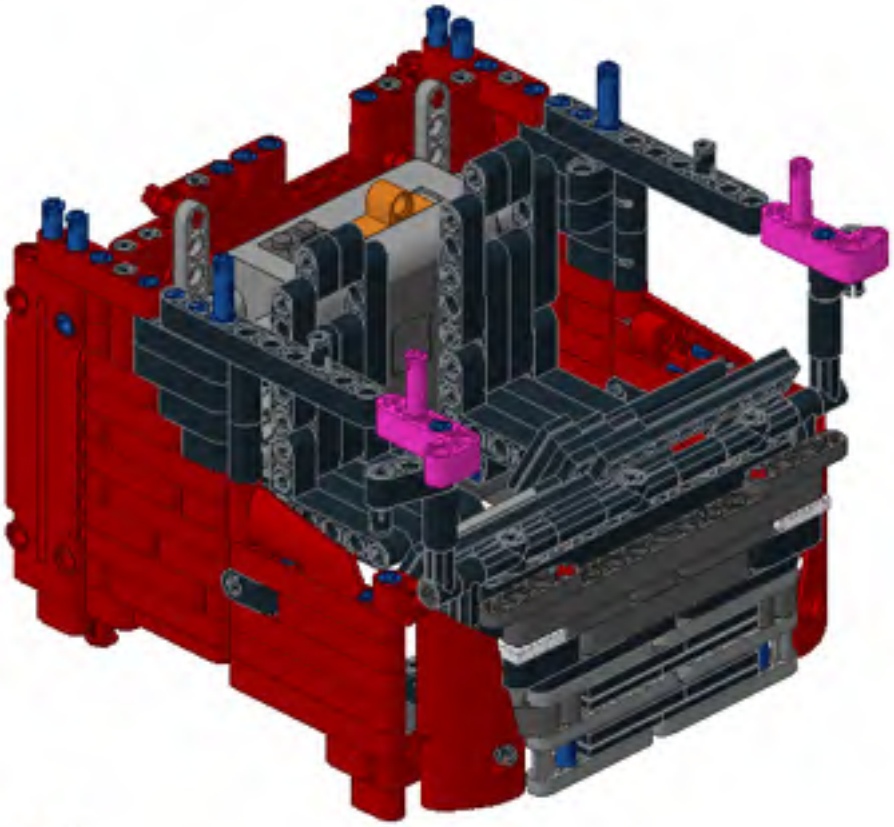

83

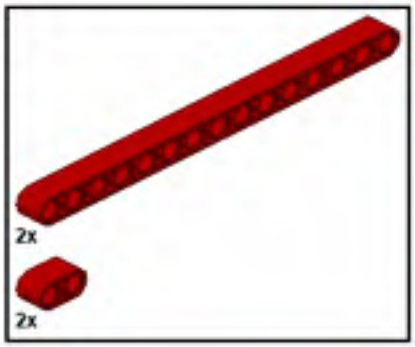

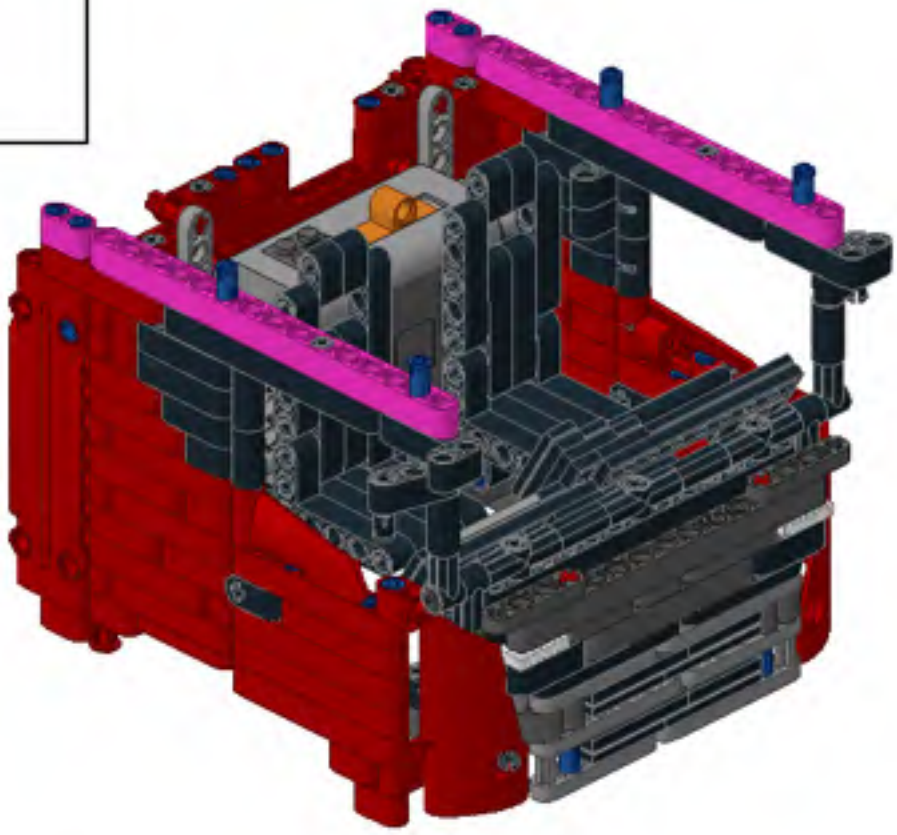

84

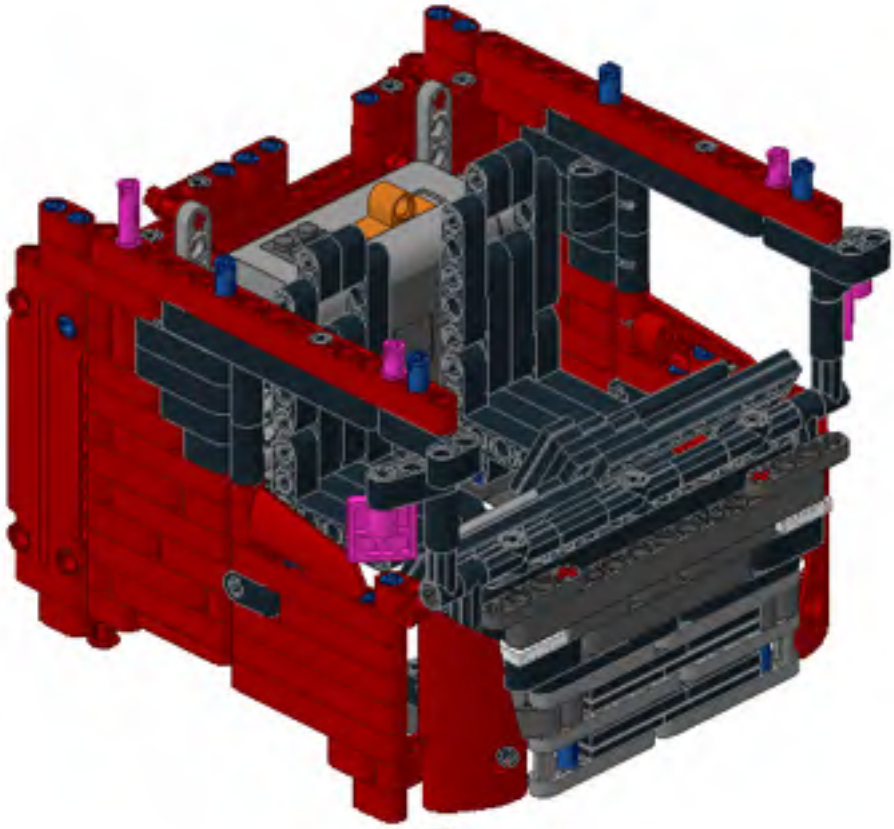

85

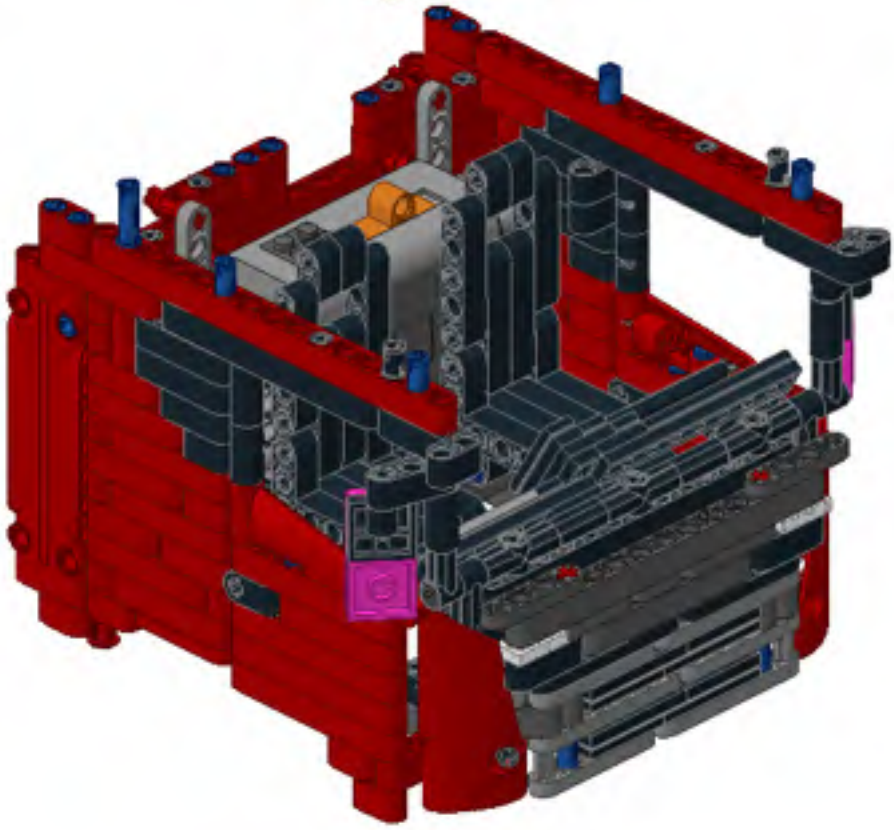

86

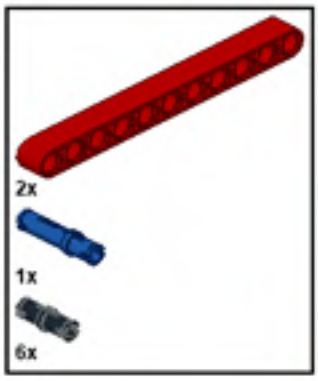

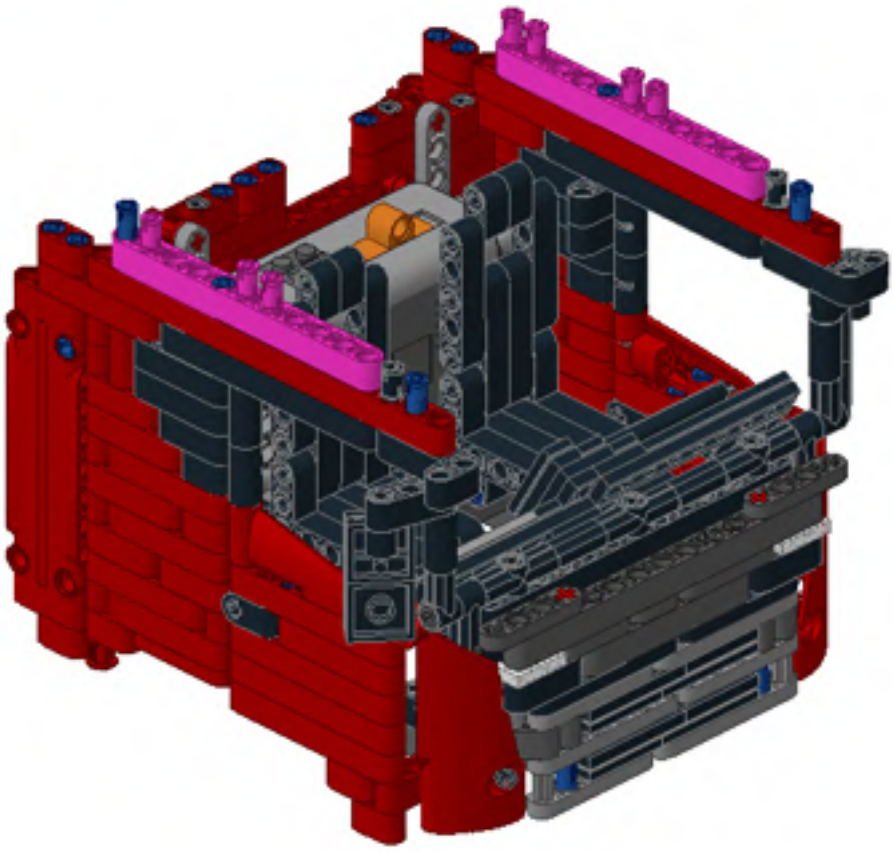

87

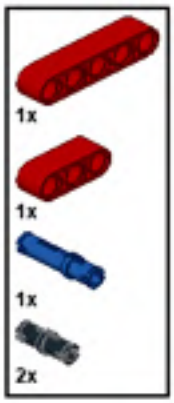

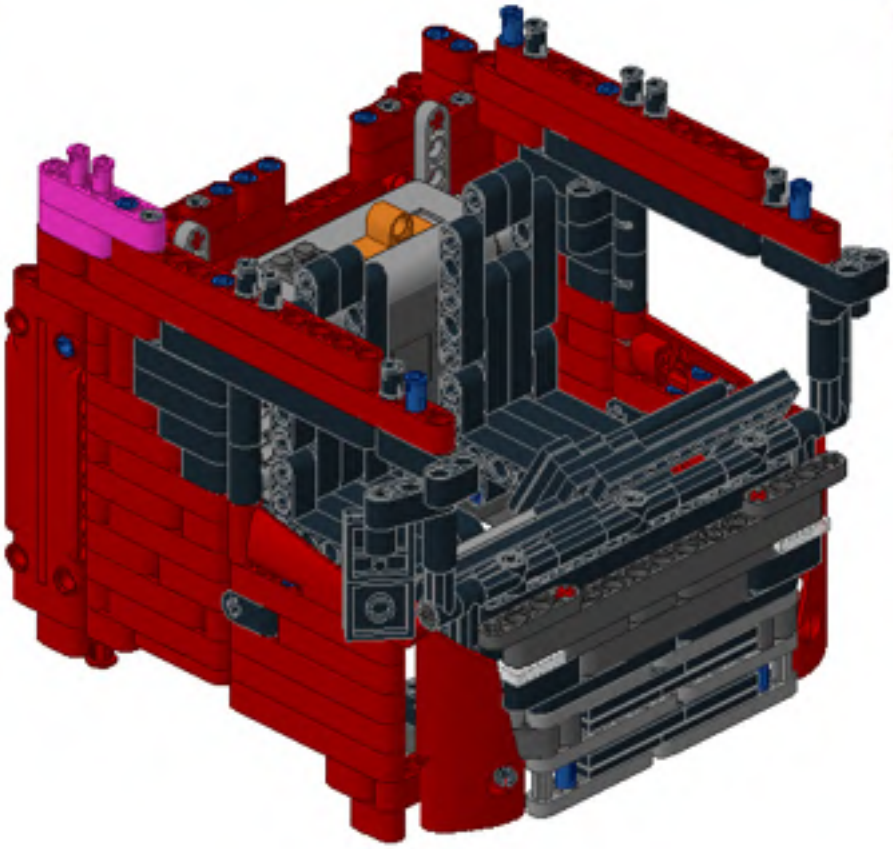

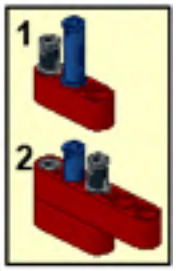

88

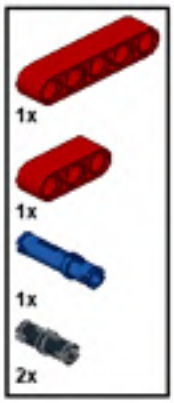

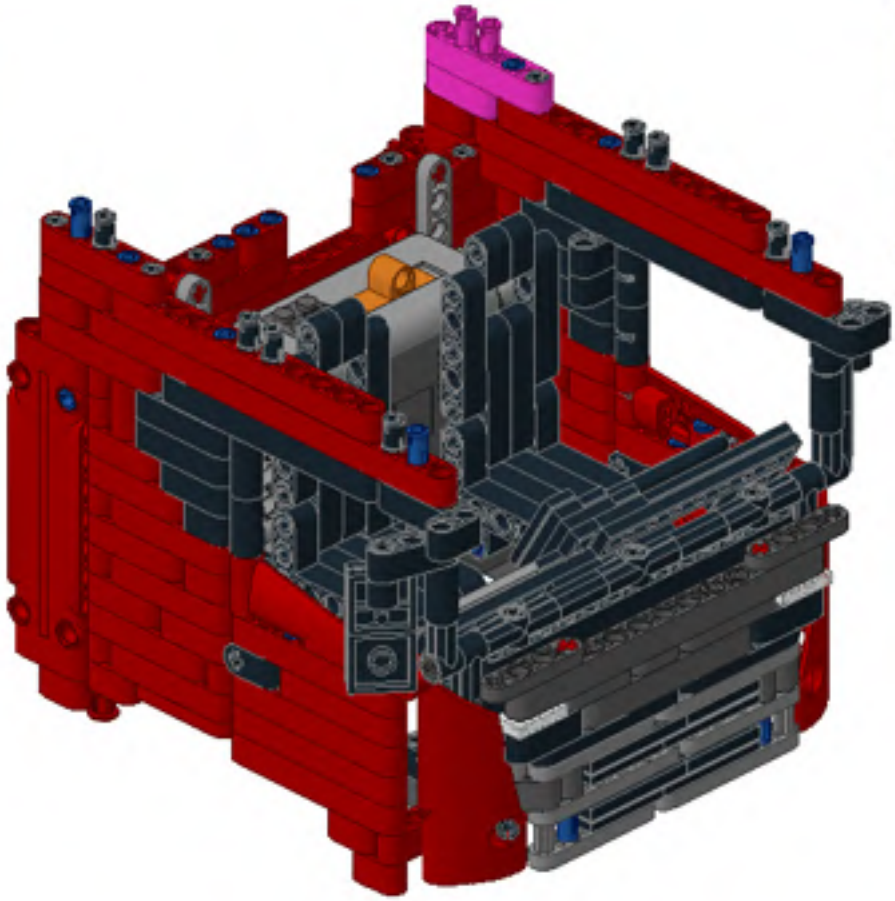

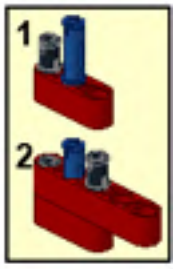

89

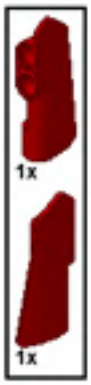

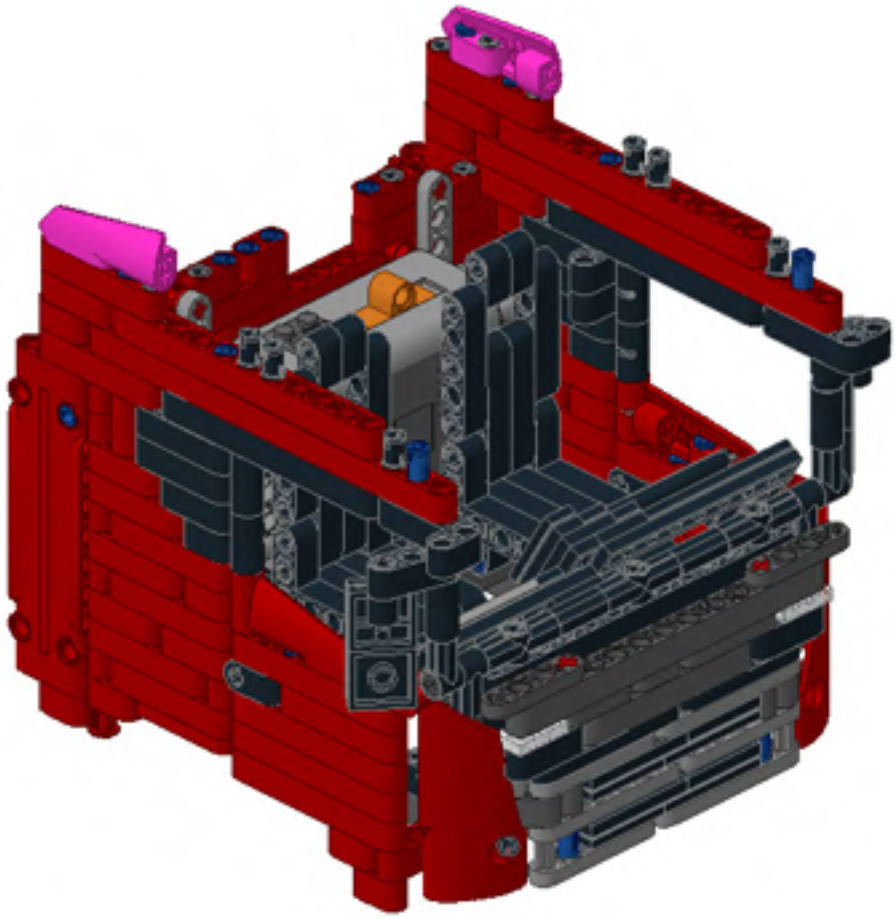

1

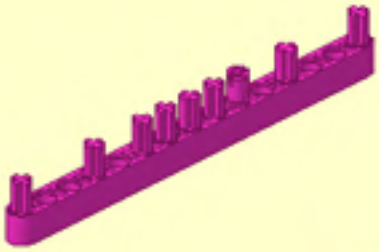

2

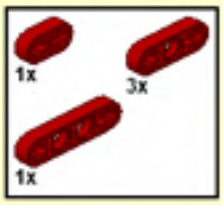

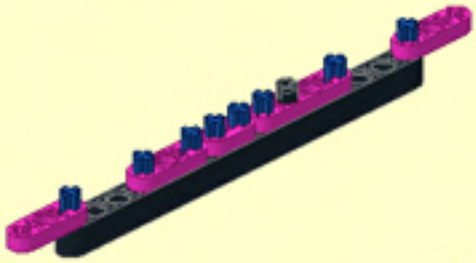

3

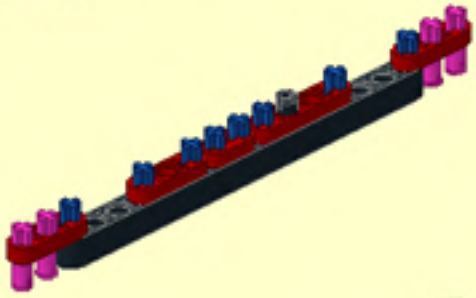

4

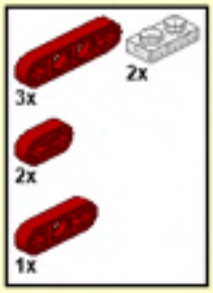

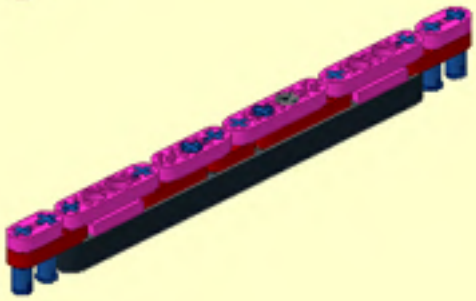

90

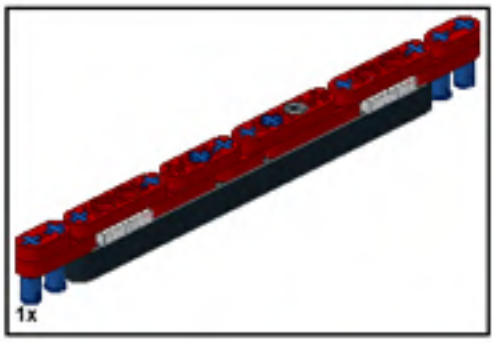

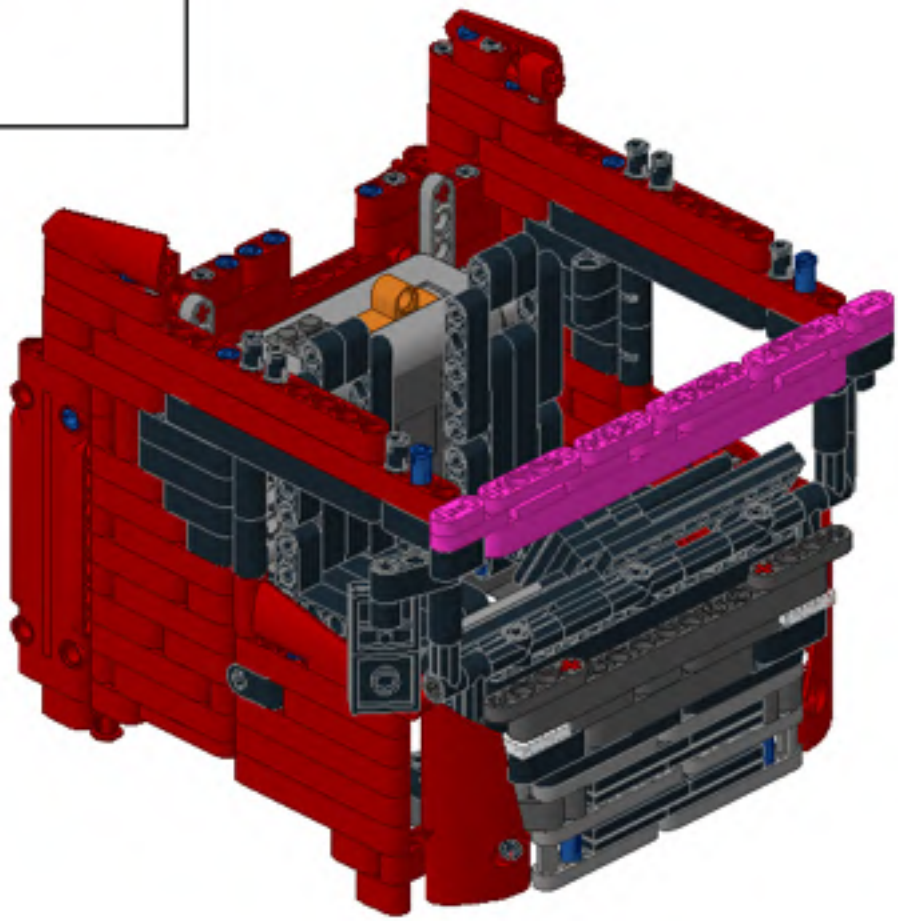

1

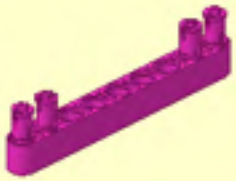

2

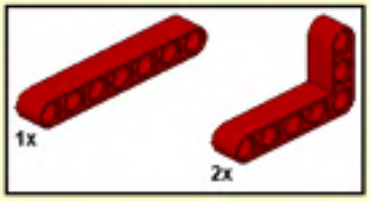

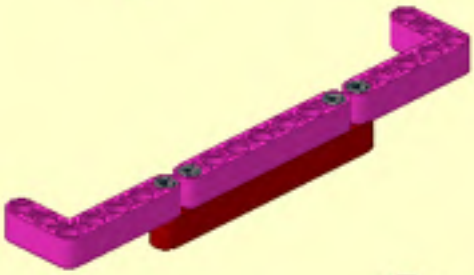

3

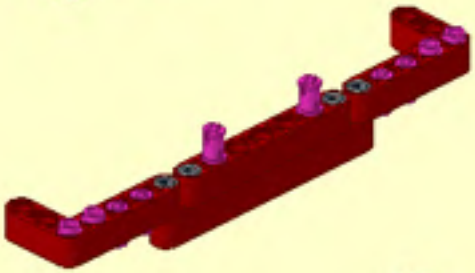

4

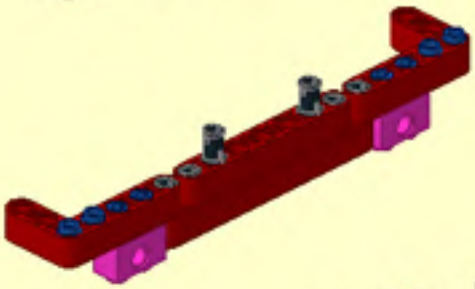

5

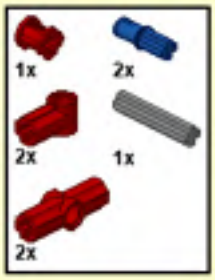

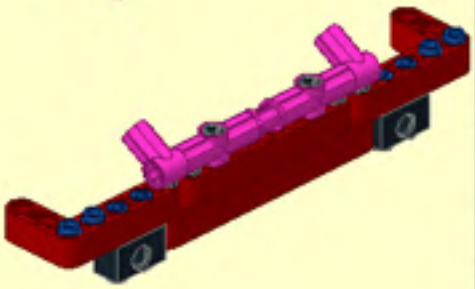

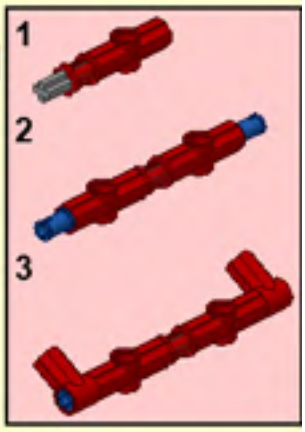

91

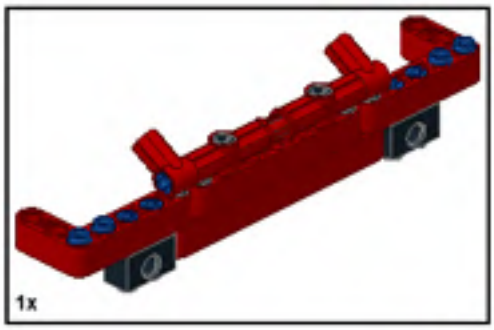

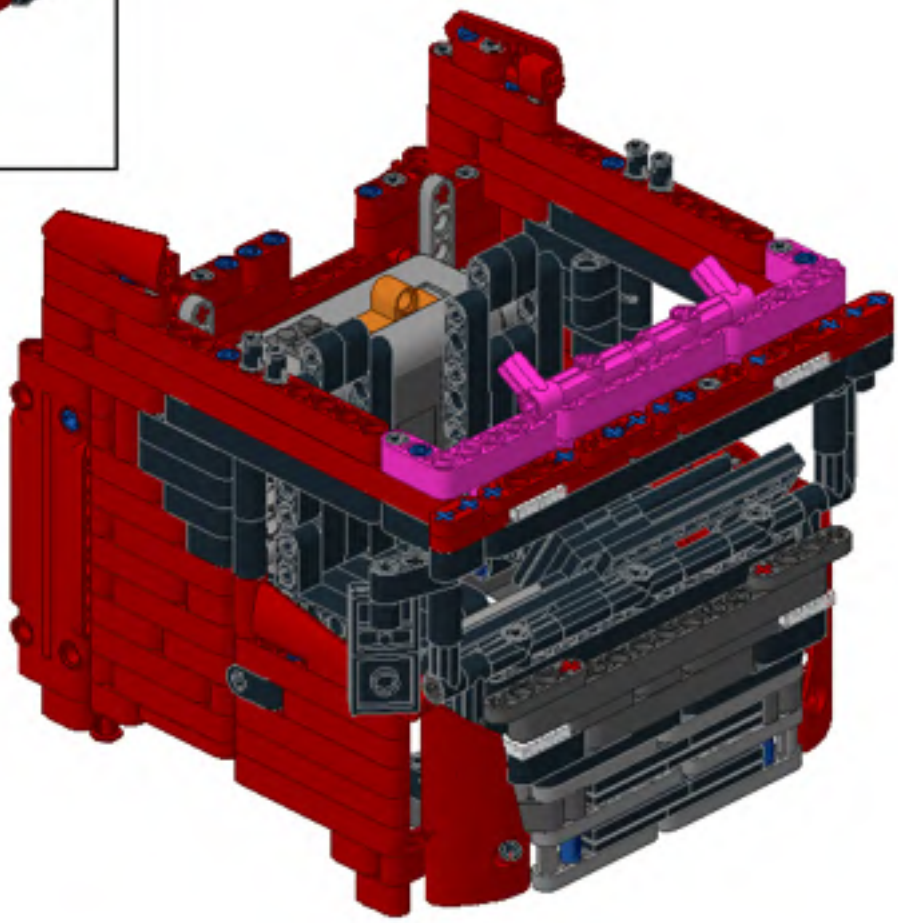

1

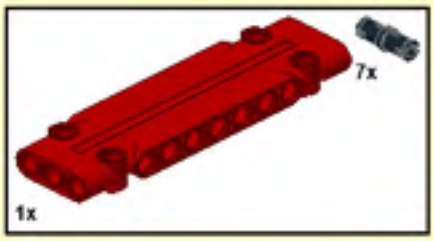

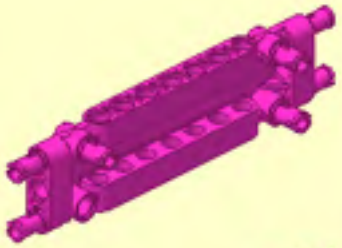

2

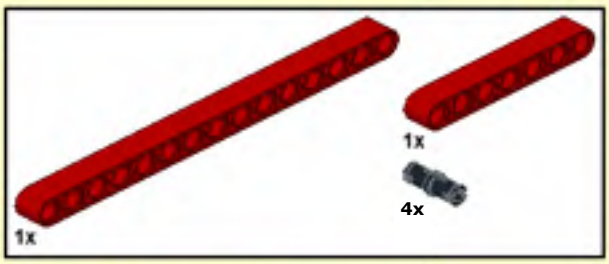

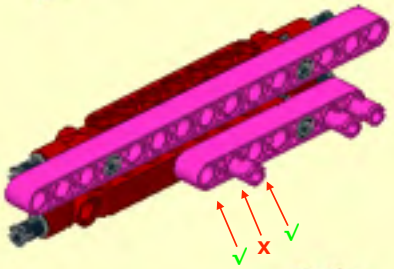

3

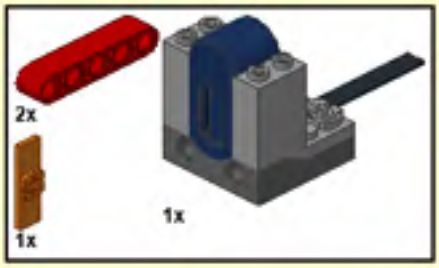

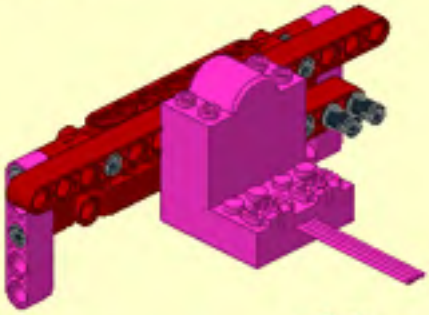

4

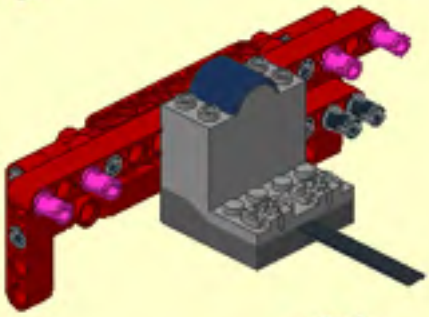

5

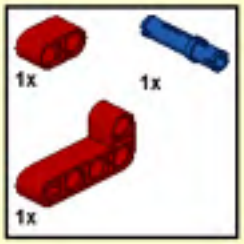

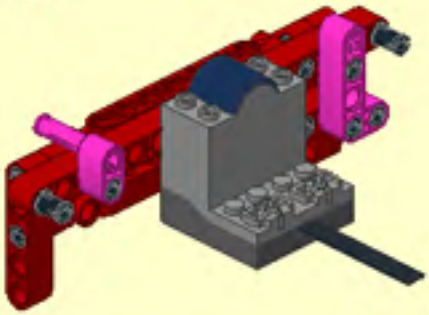

6

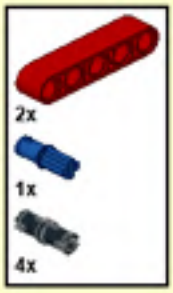

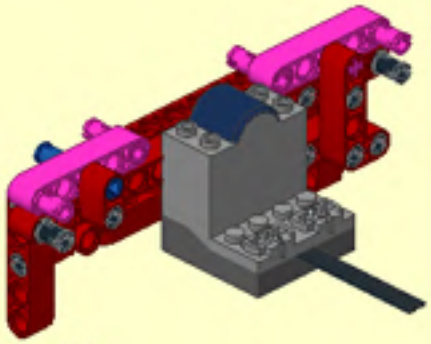

7

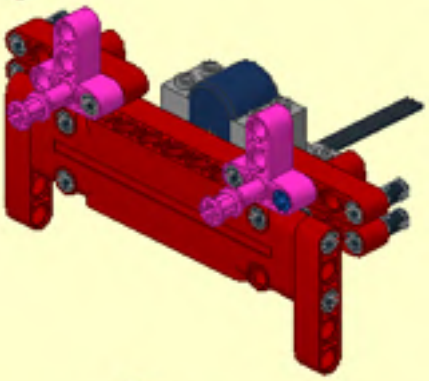

8

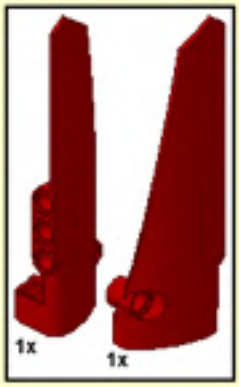

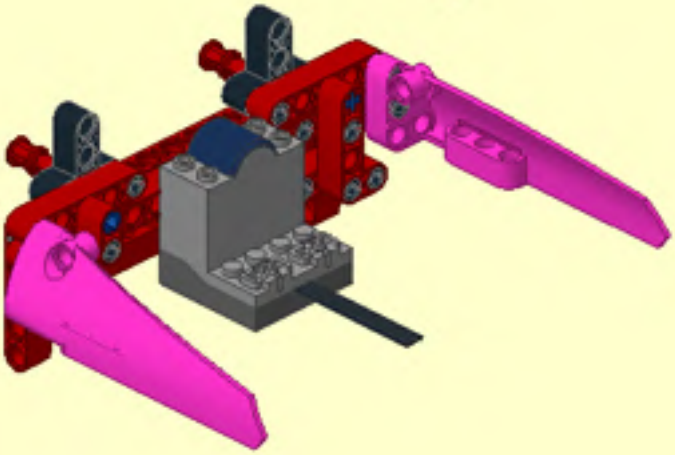

92

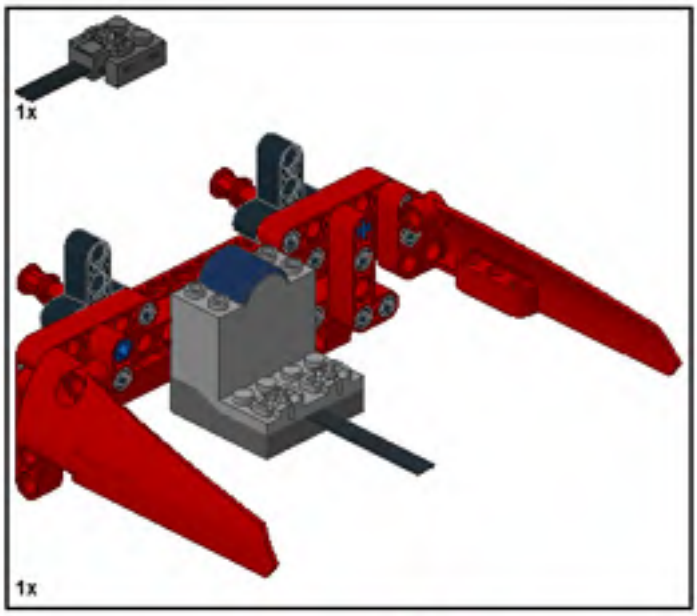

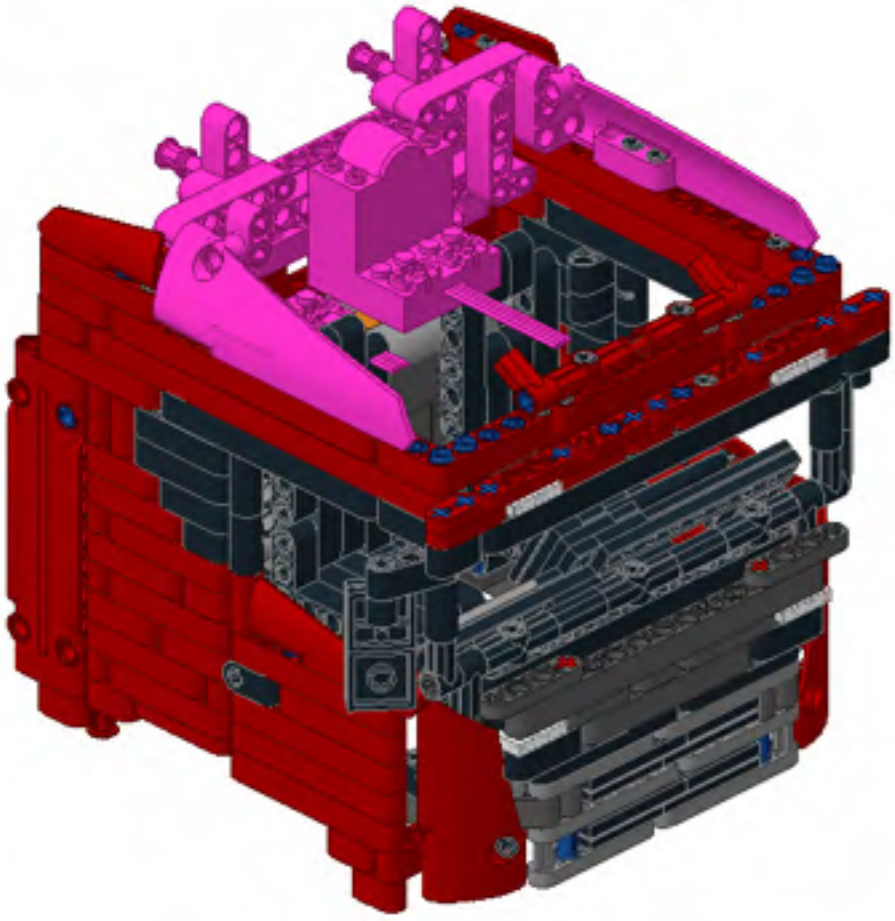

1

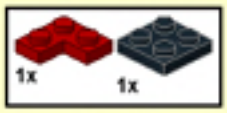

2

3

4

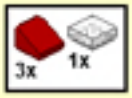

5

93

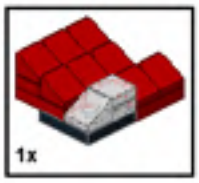

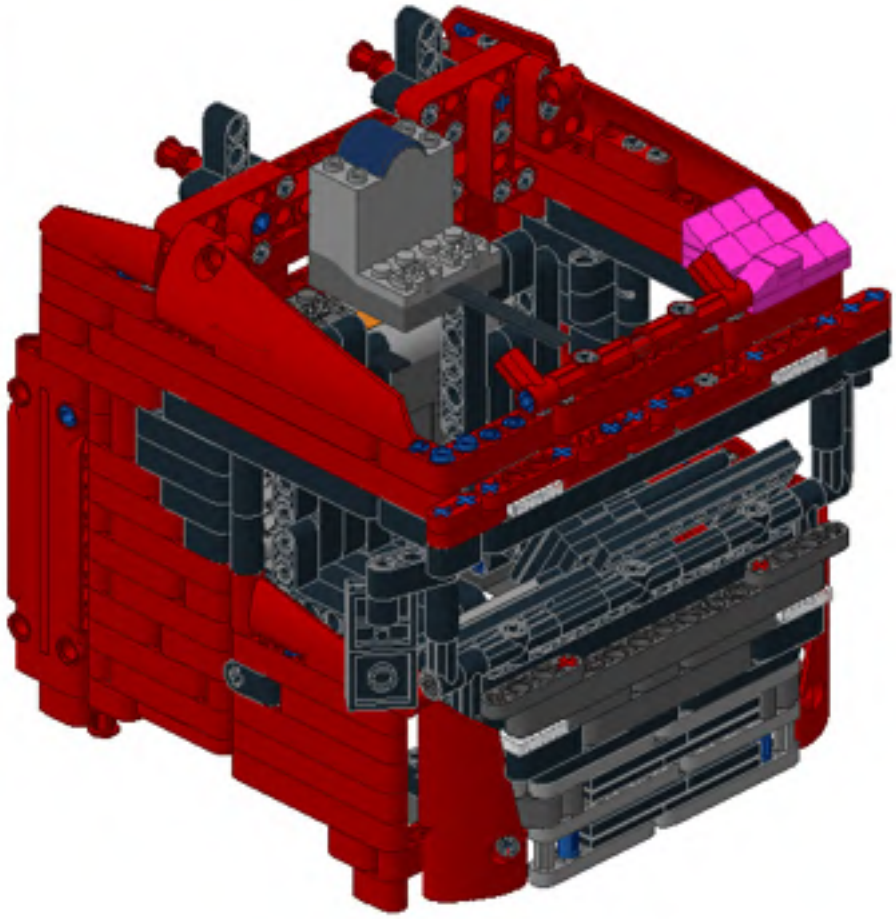

1

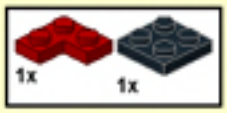

2

3

4

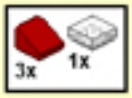

5

94

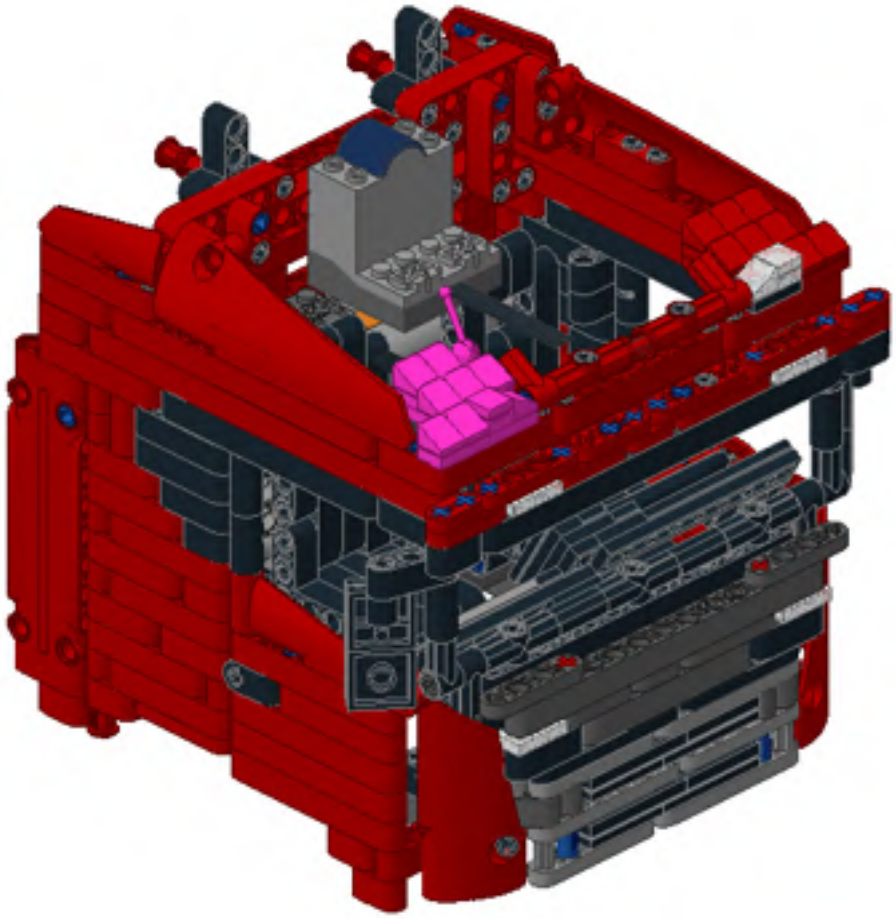

1

2

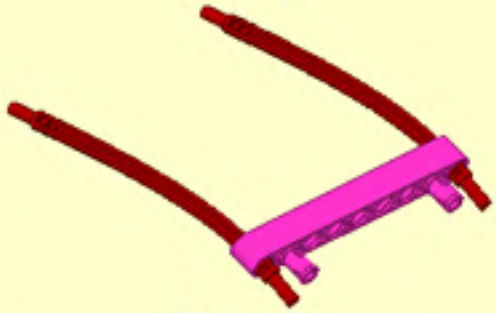

3

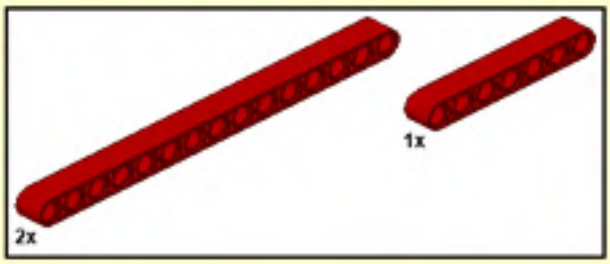

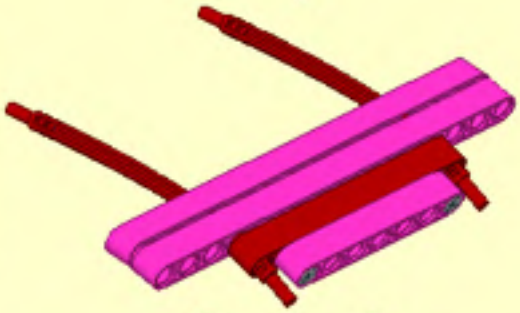

4

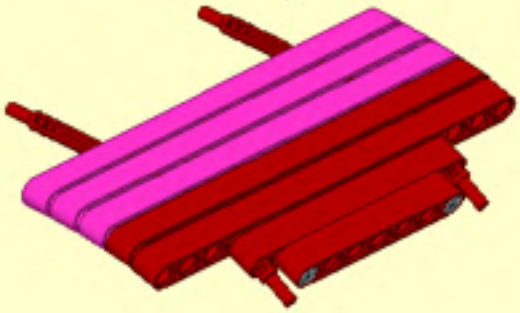

95

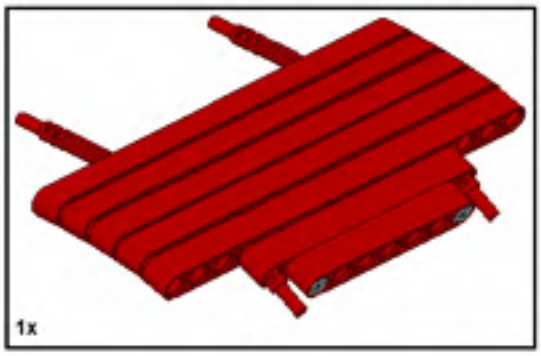

1x

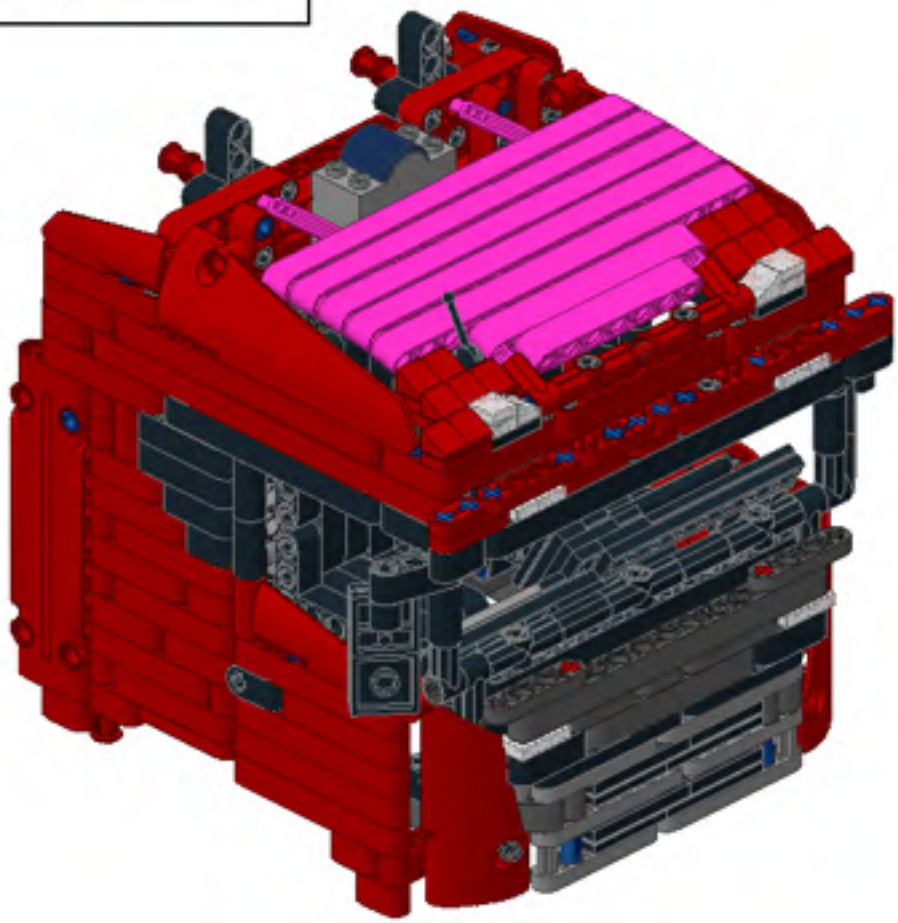

96

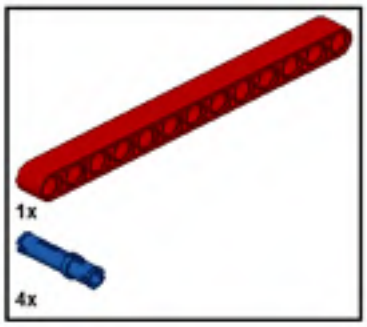

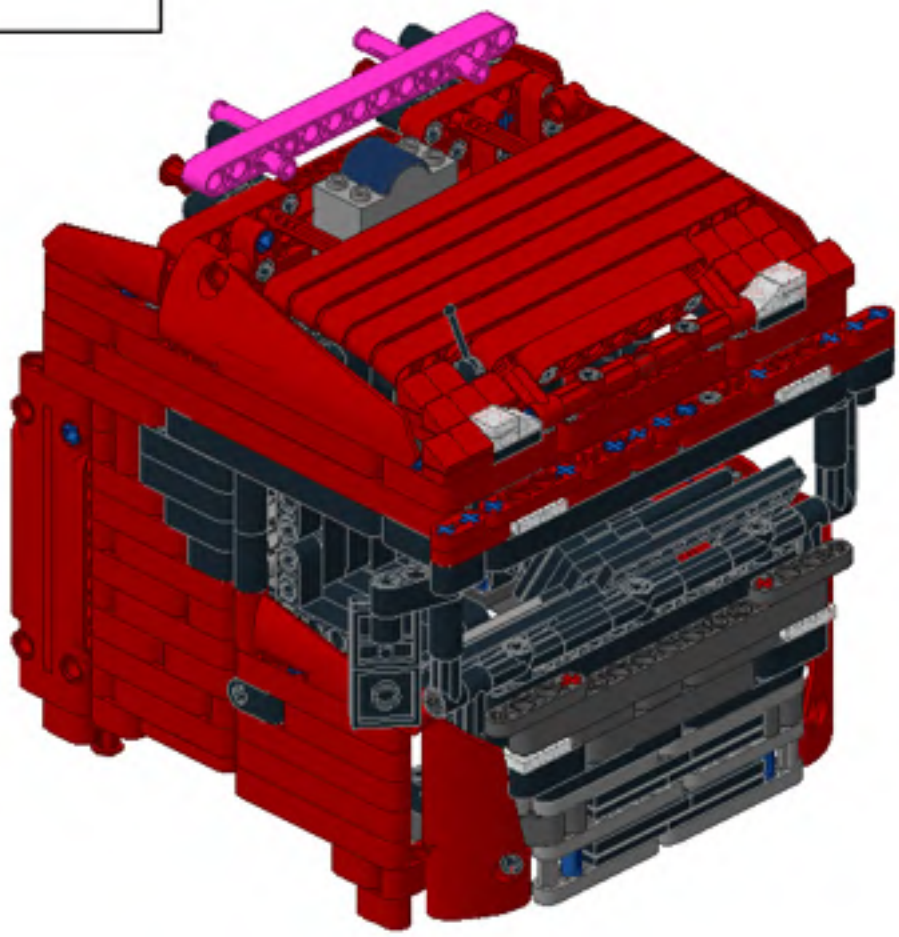

97

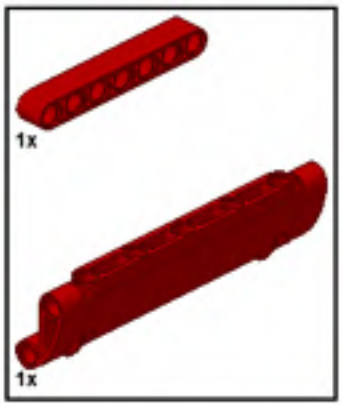

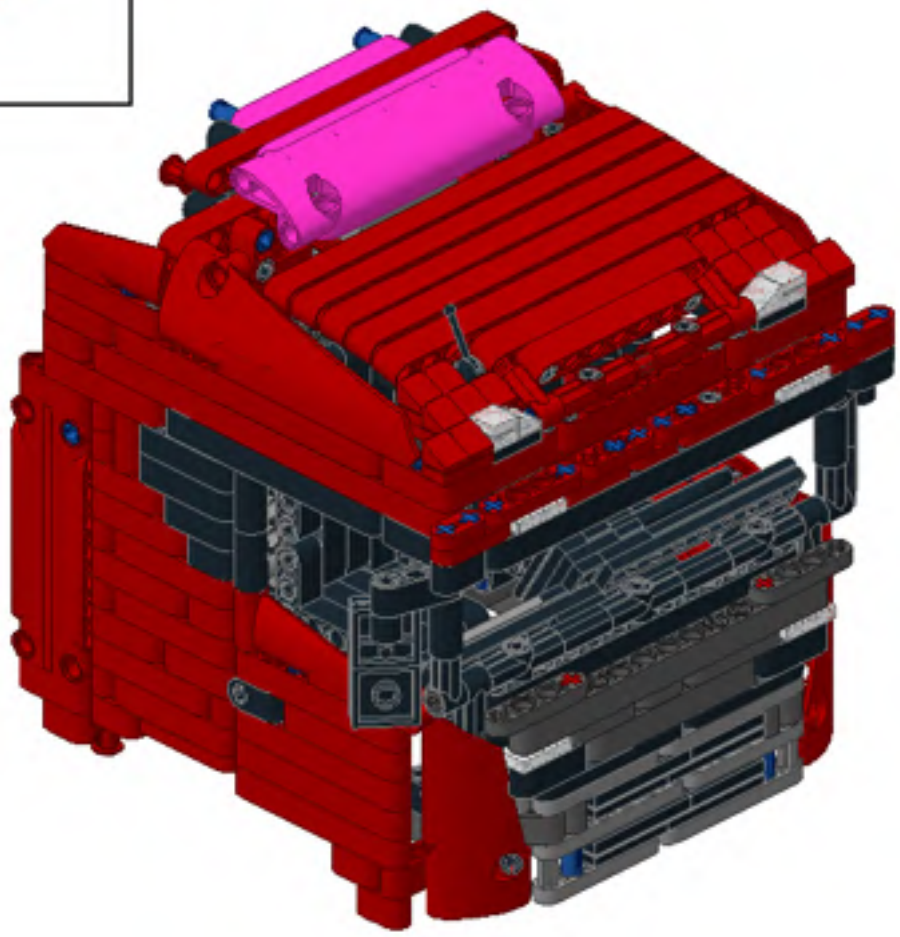

98

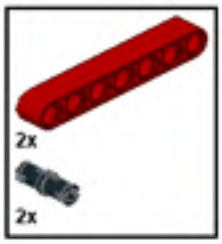

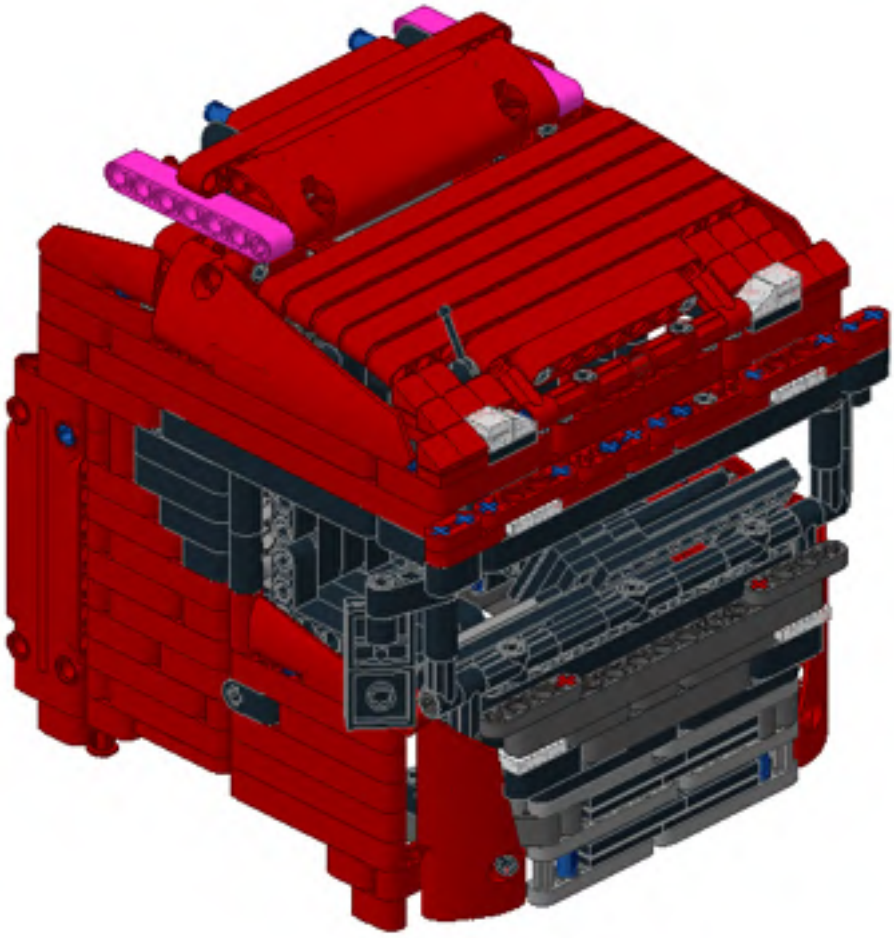
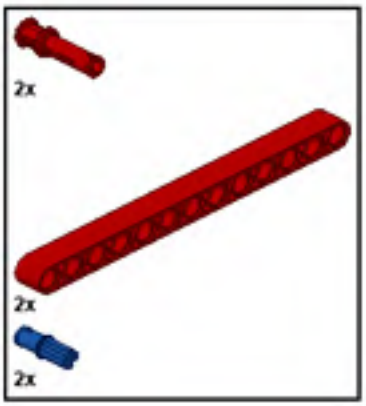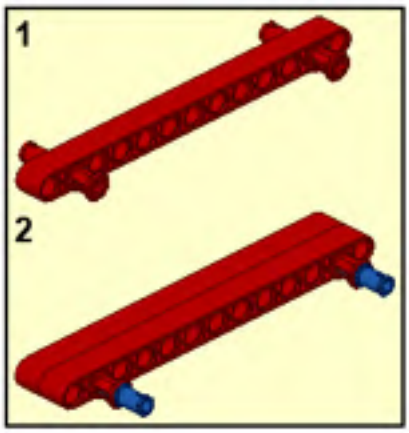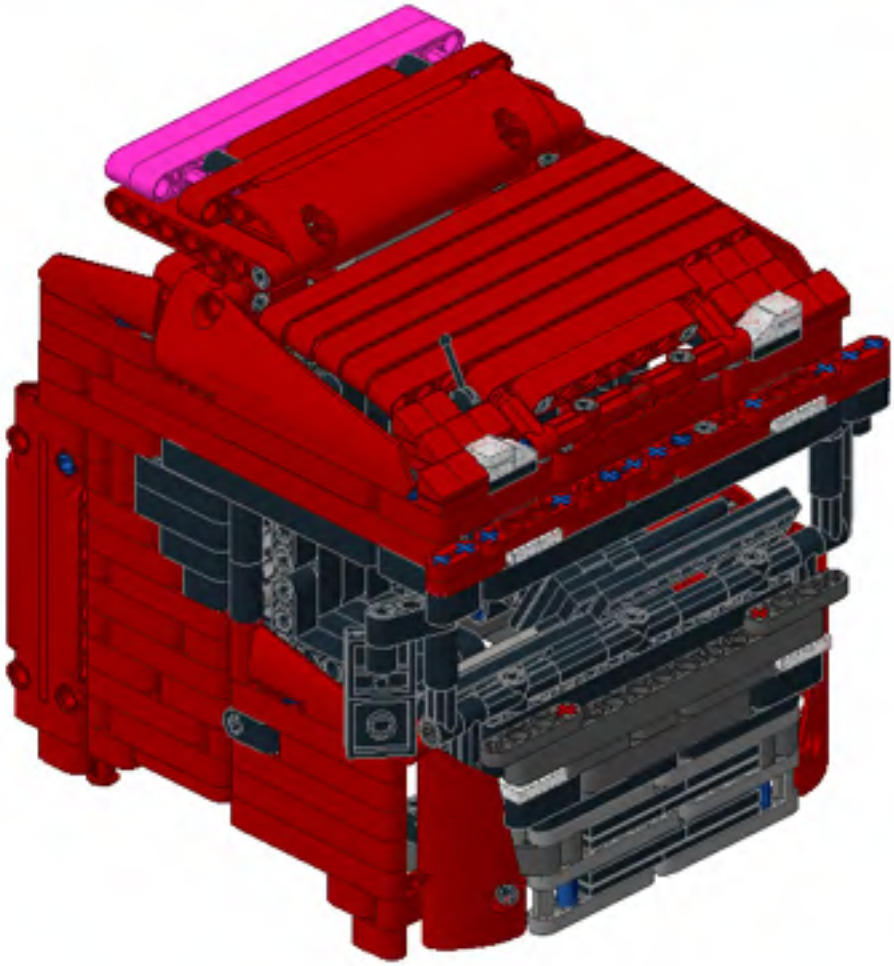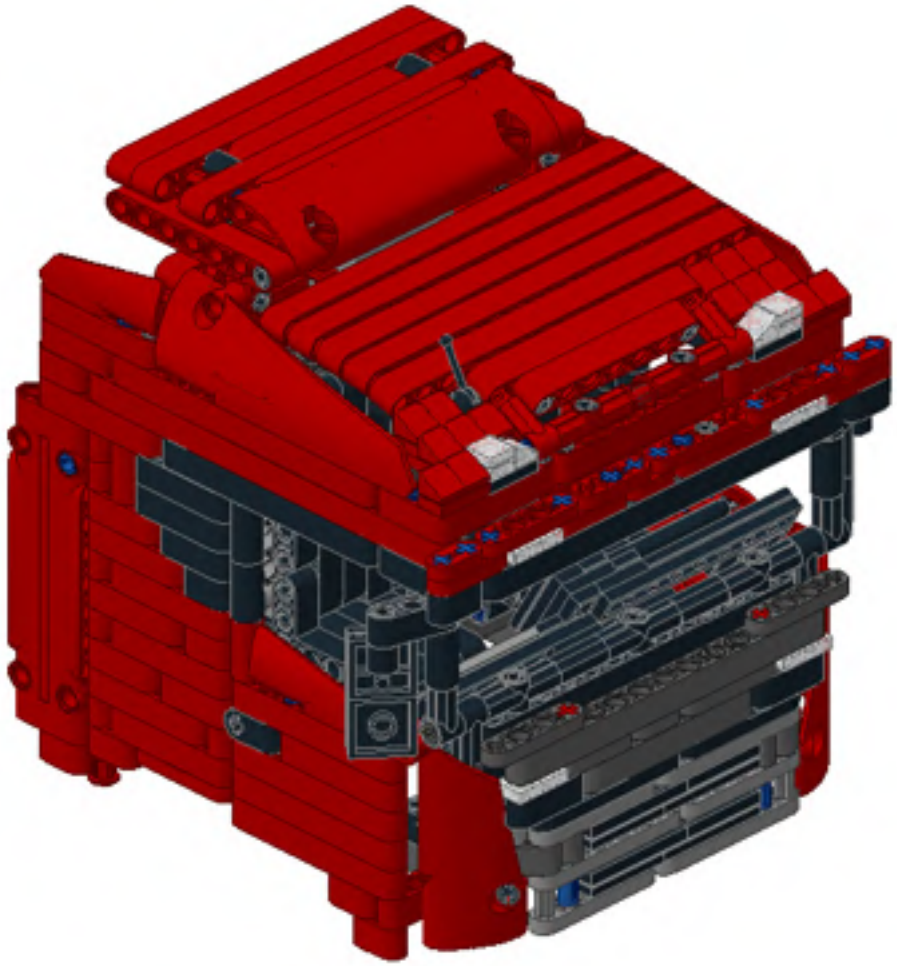
99